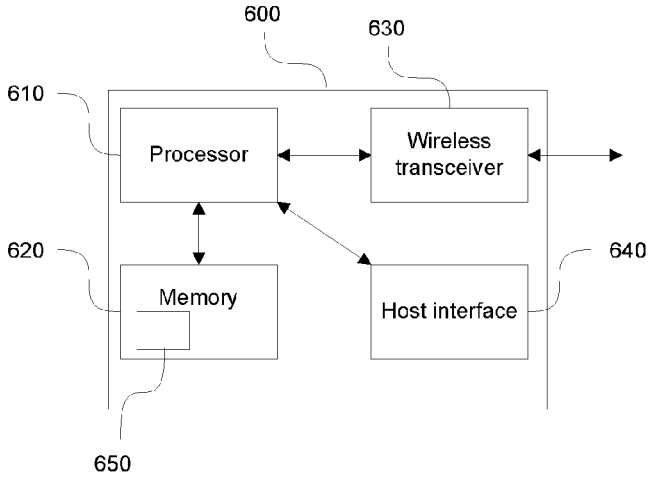

Figure 6

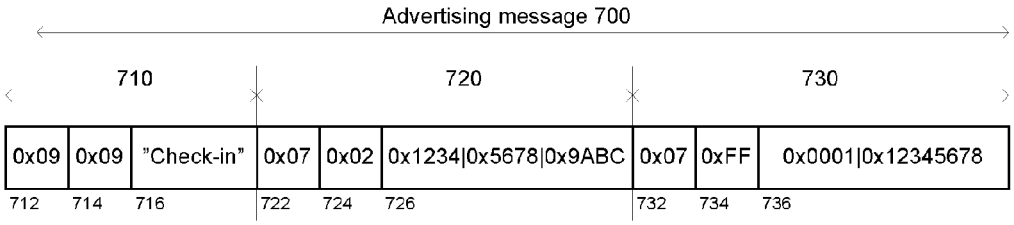

Figure 7