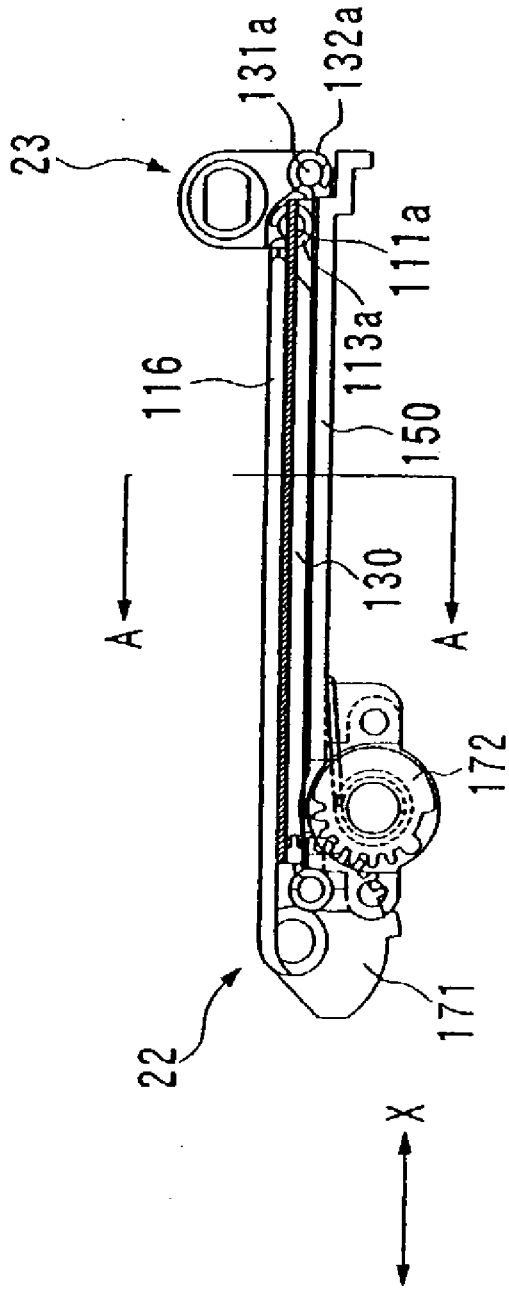[Figure 10]