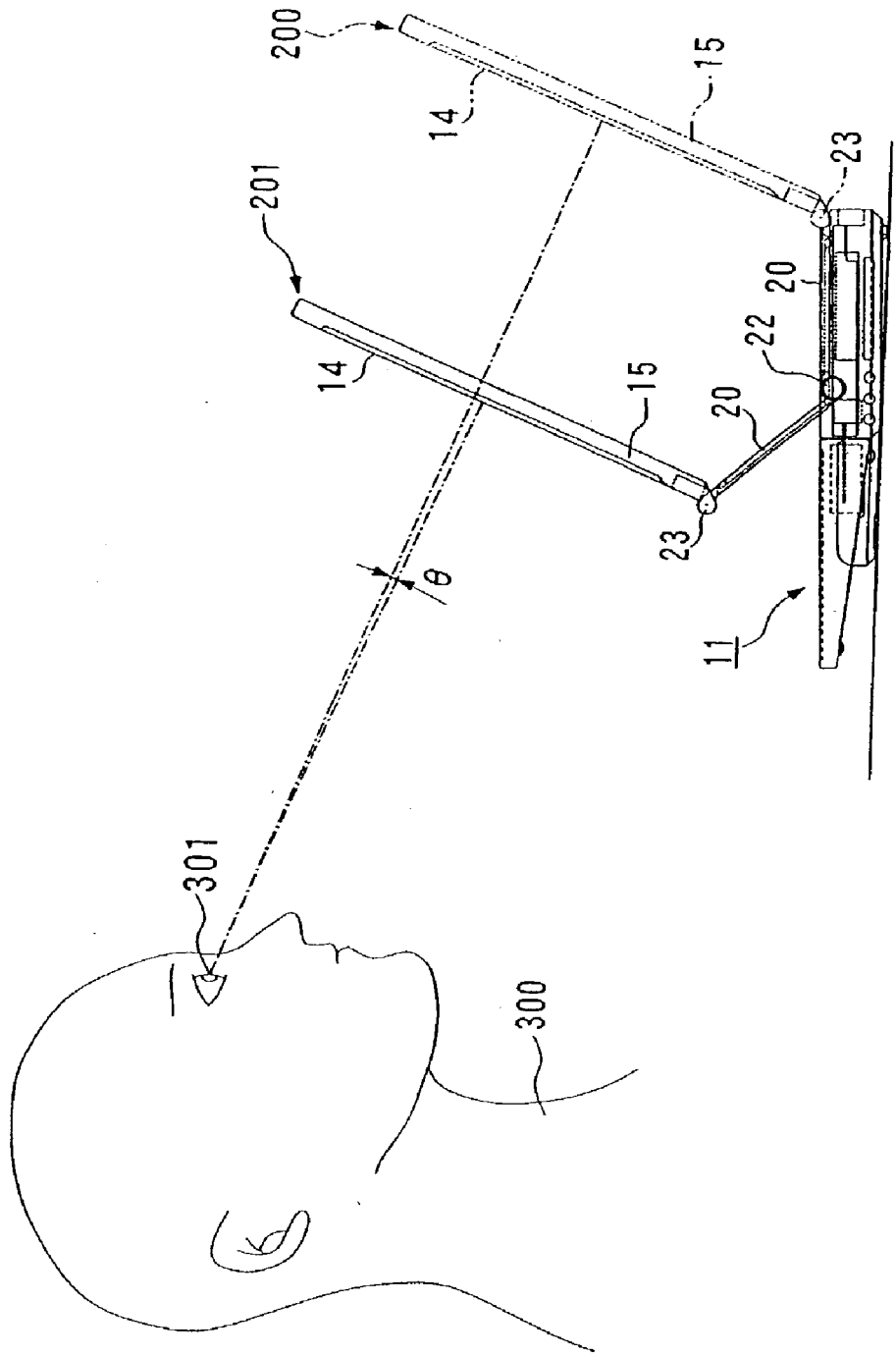[Figure 12]