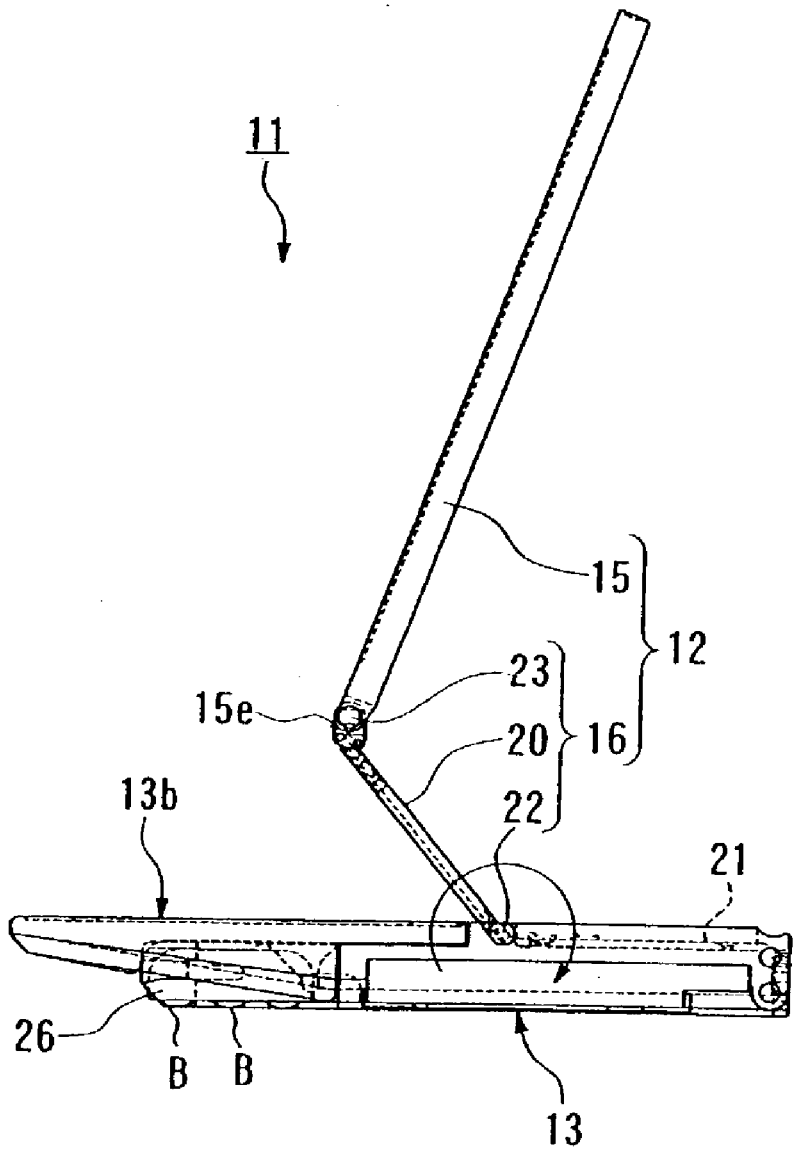[Figure 4]