[Figure 7]

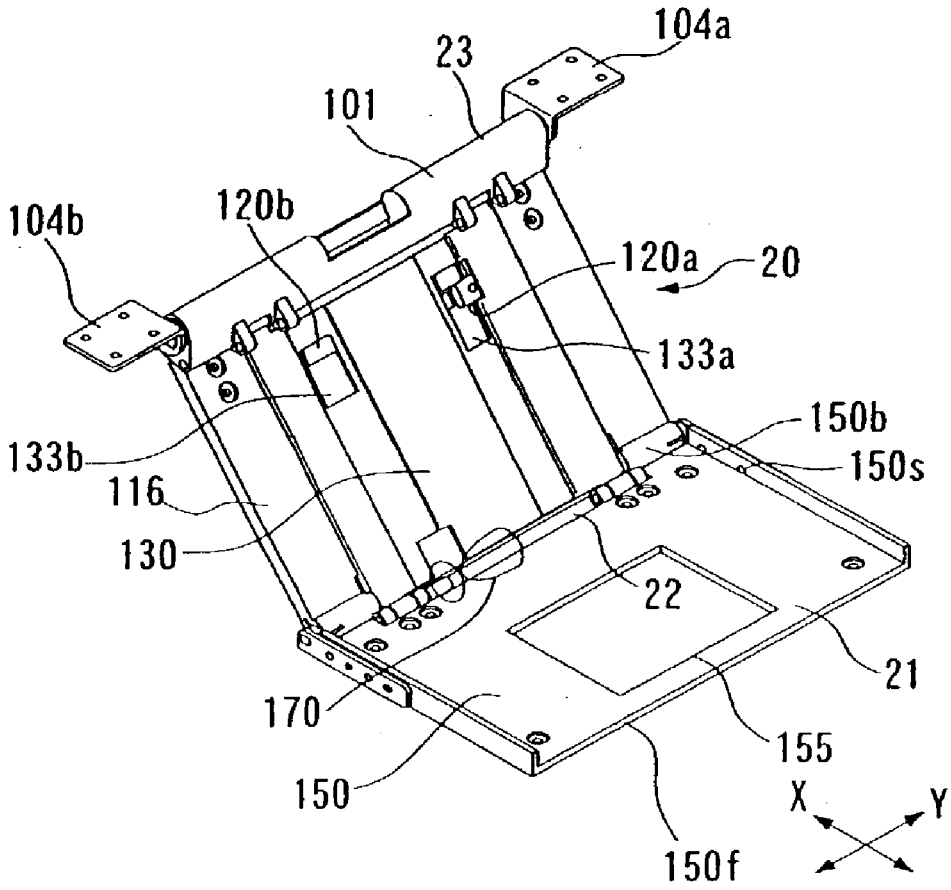
104a
23
101
104b
120b
120a
20
133a
150b
150s
133b
116
130
22
21
170
155
150
X
Y
150f