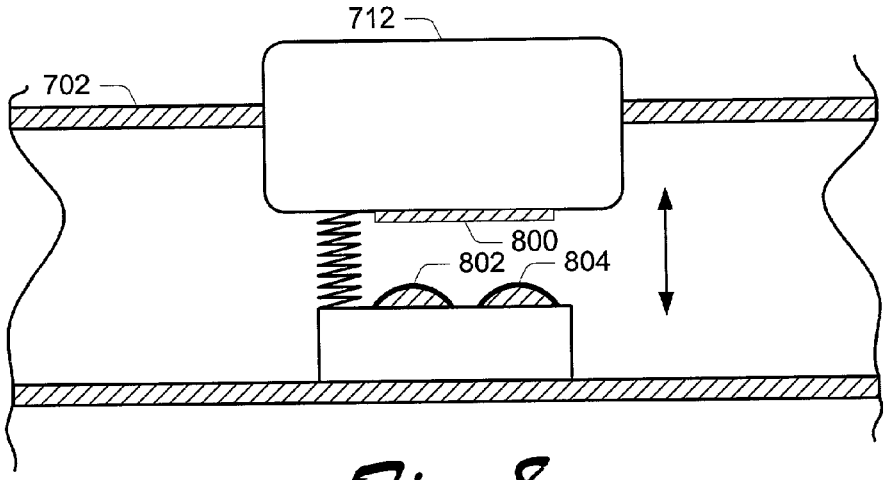
712
702
800
802
804

Fig. 8

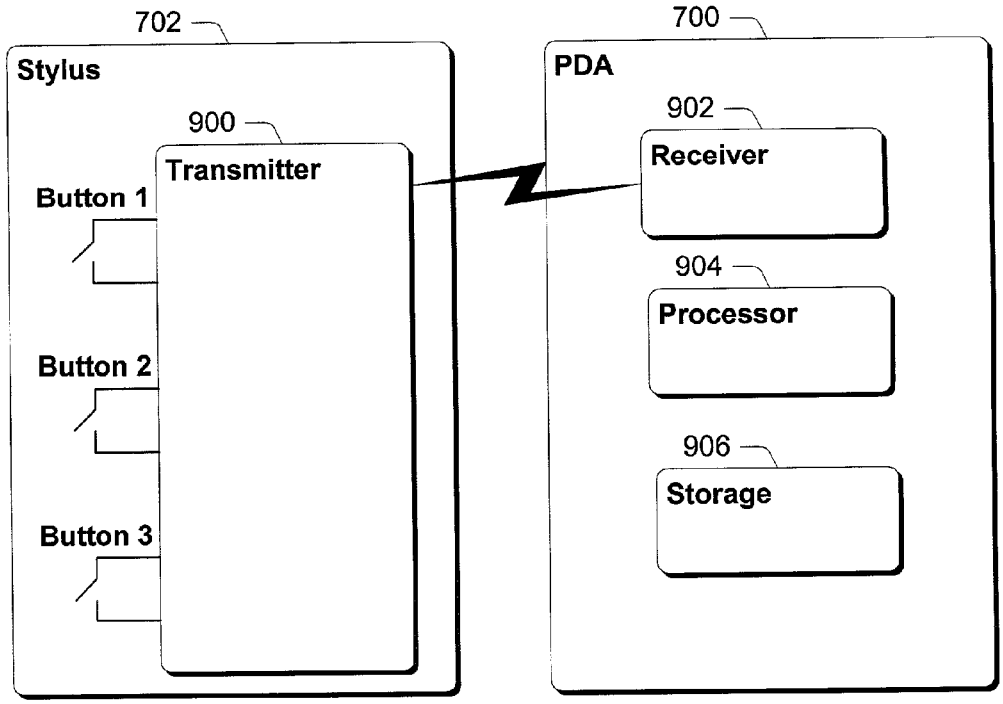
702
Stylus
900
Transmitter
Button 1
Button 2
Button 3
700
PDA
902
Receiver
904
Processor
906
Storage

Fig. 9