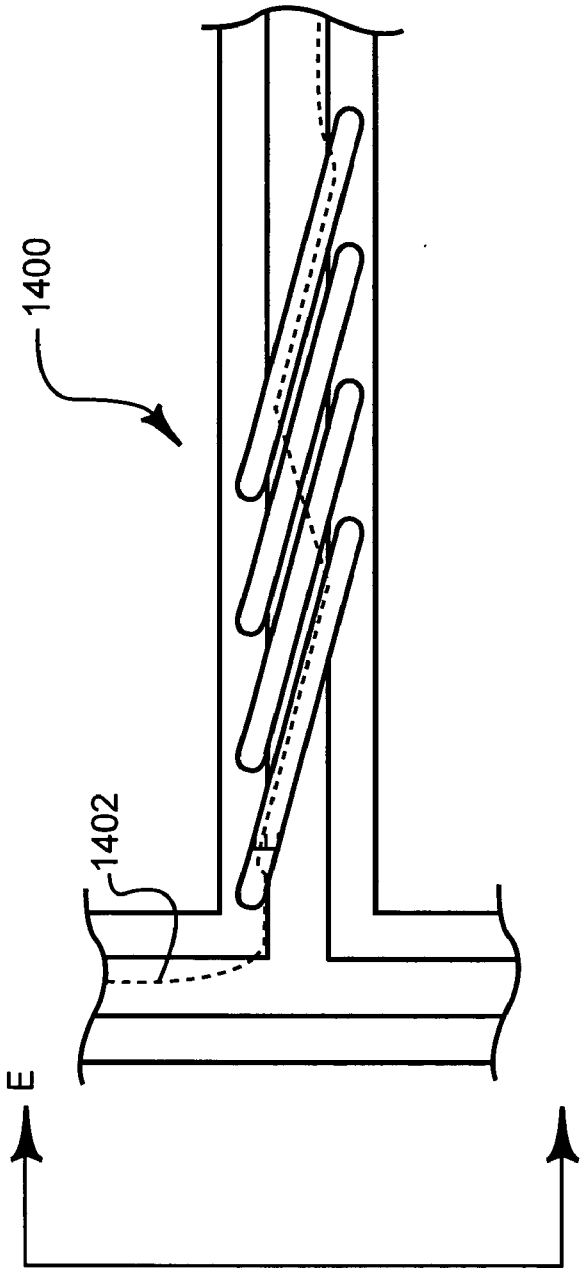

FIGURE 14A

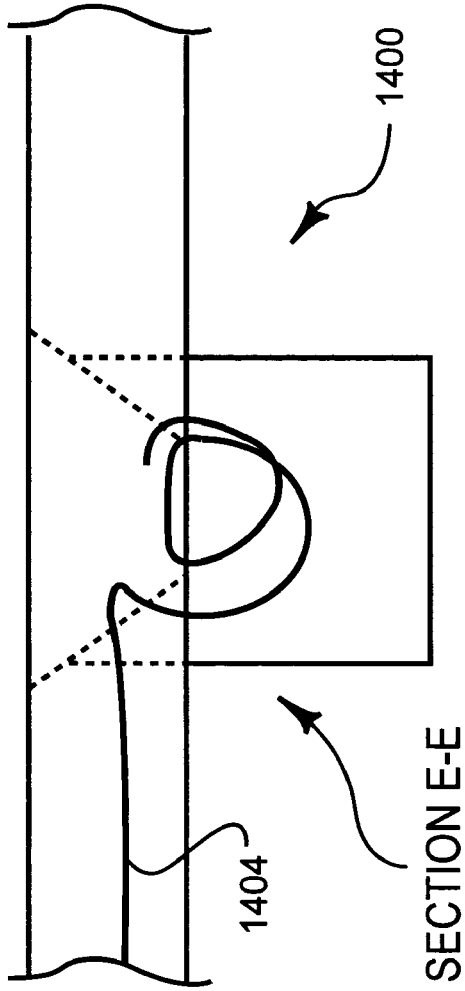

FIGURE 14B