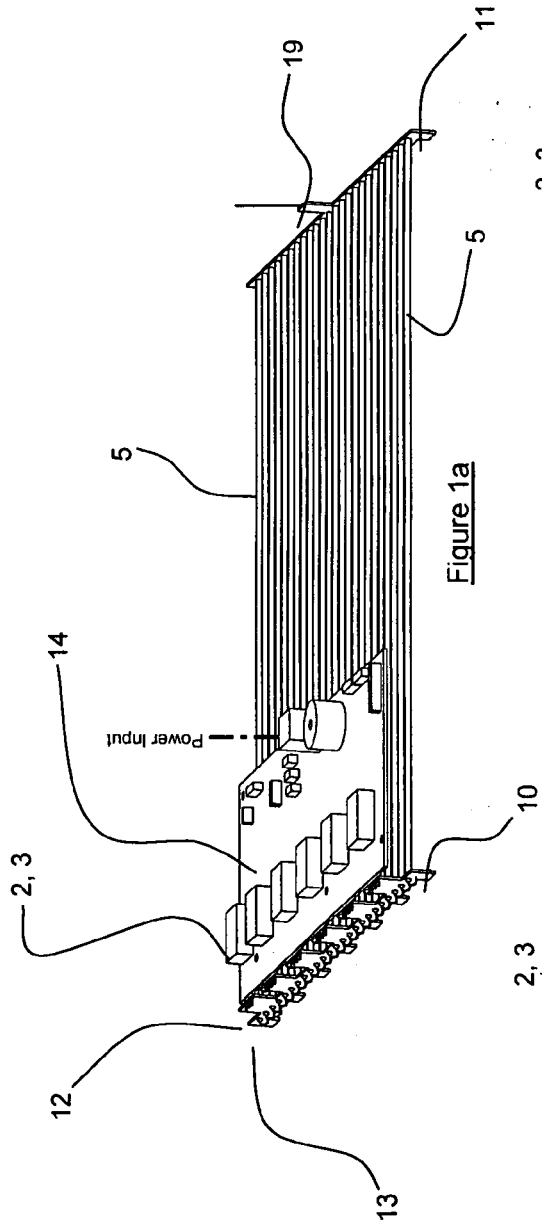

Figure 1a

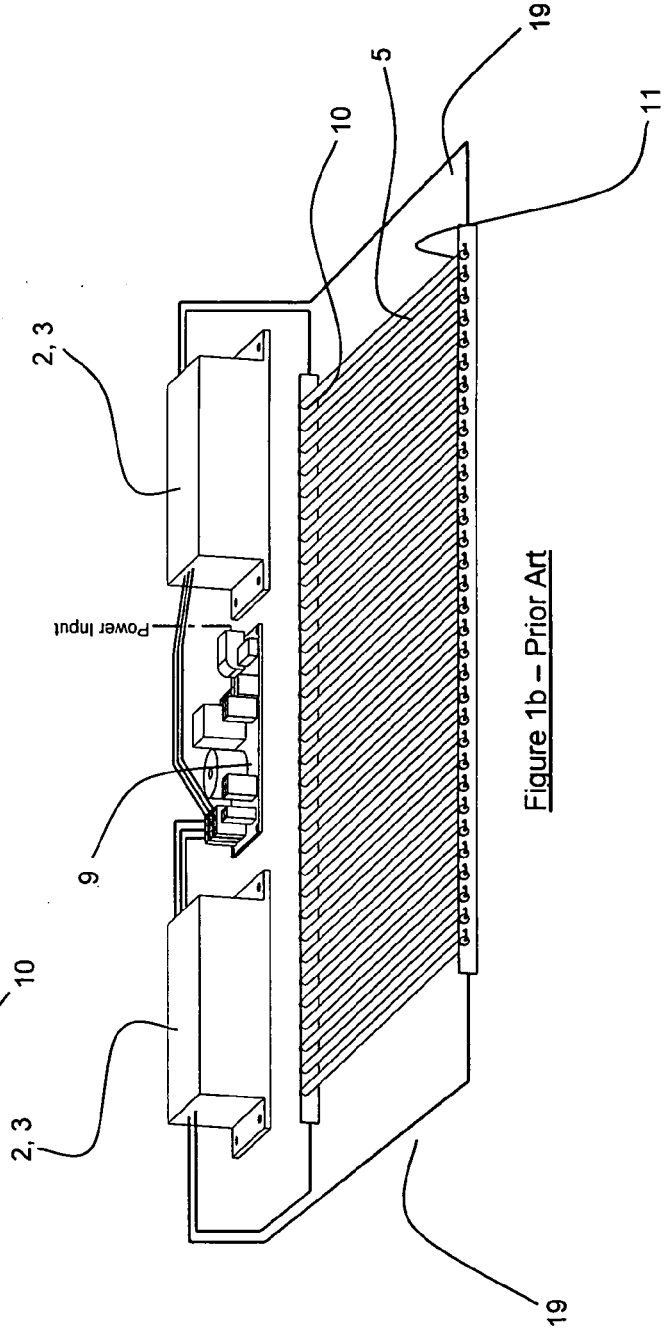

Figure 1b – Prior Art