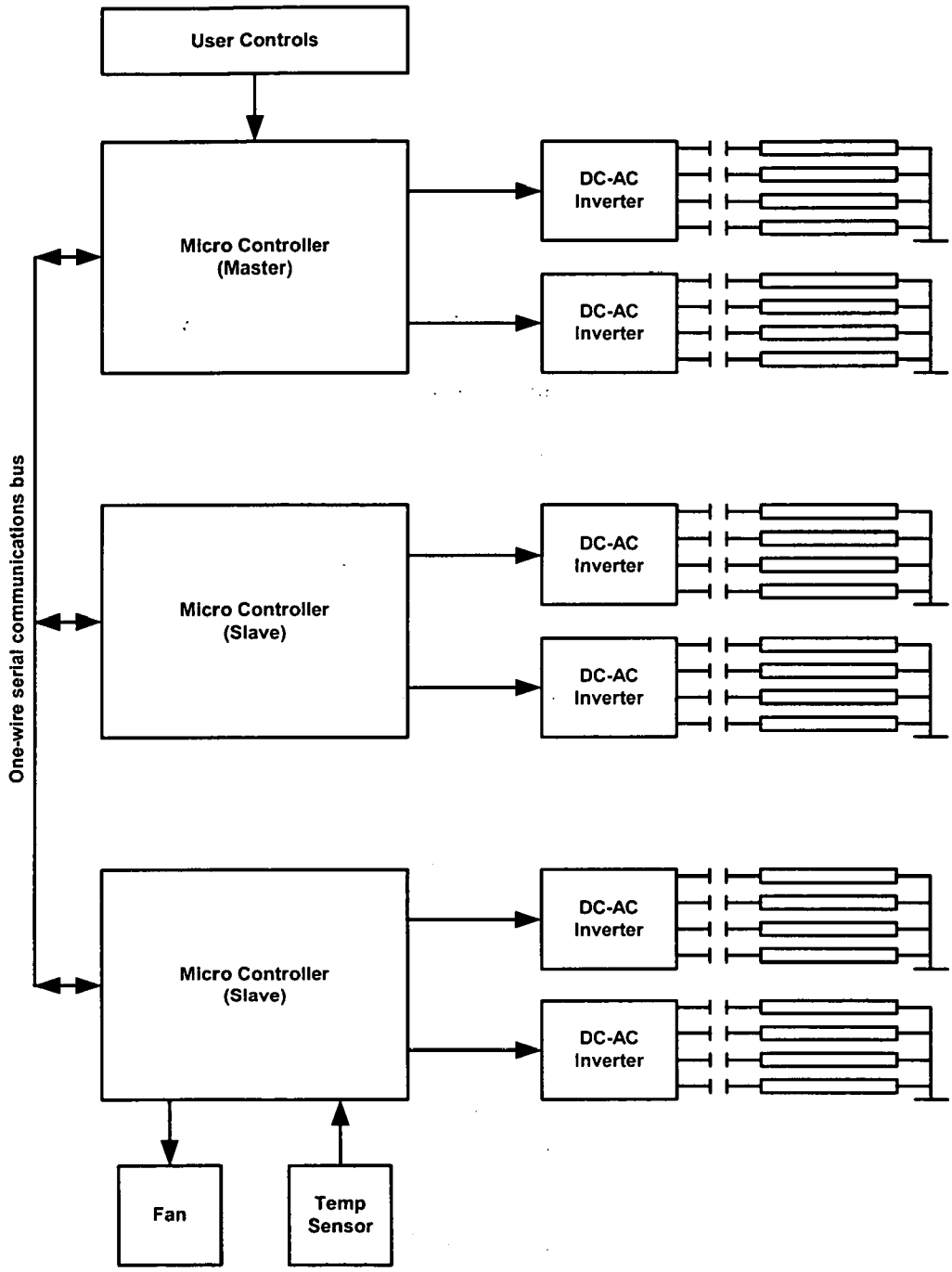
User Controls
Micro Controller (Master)
DC-AC Inverter
DC-AC Inverter
Micro Controller (Slave)
DC-AC Inverter
DC-AC Inverter
Micro Controller (Slave)
DC-AC Inverter
DC-AC Inverter
Fan
Temp Sensor
One-wire serial communications bus

FIGURE 3