FIG. 15

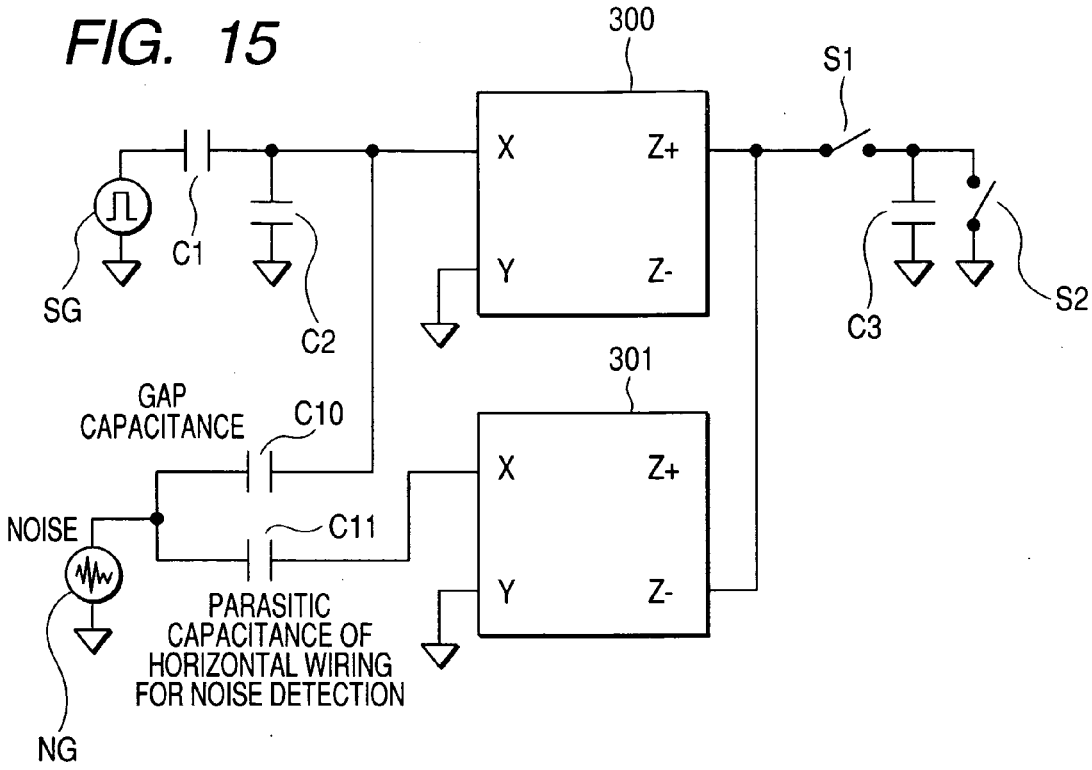
300
S1
X
Z+
Y
Z-
SG
C1
C2
C3
S2
301
GAP
CAPACITANCE
C10
NOISE
C11
PARASITIC
CAPACITANCE OF
HORIZONTAL WIRING
FOR NOISE DETECTION
NG

FIG. 16

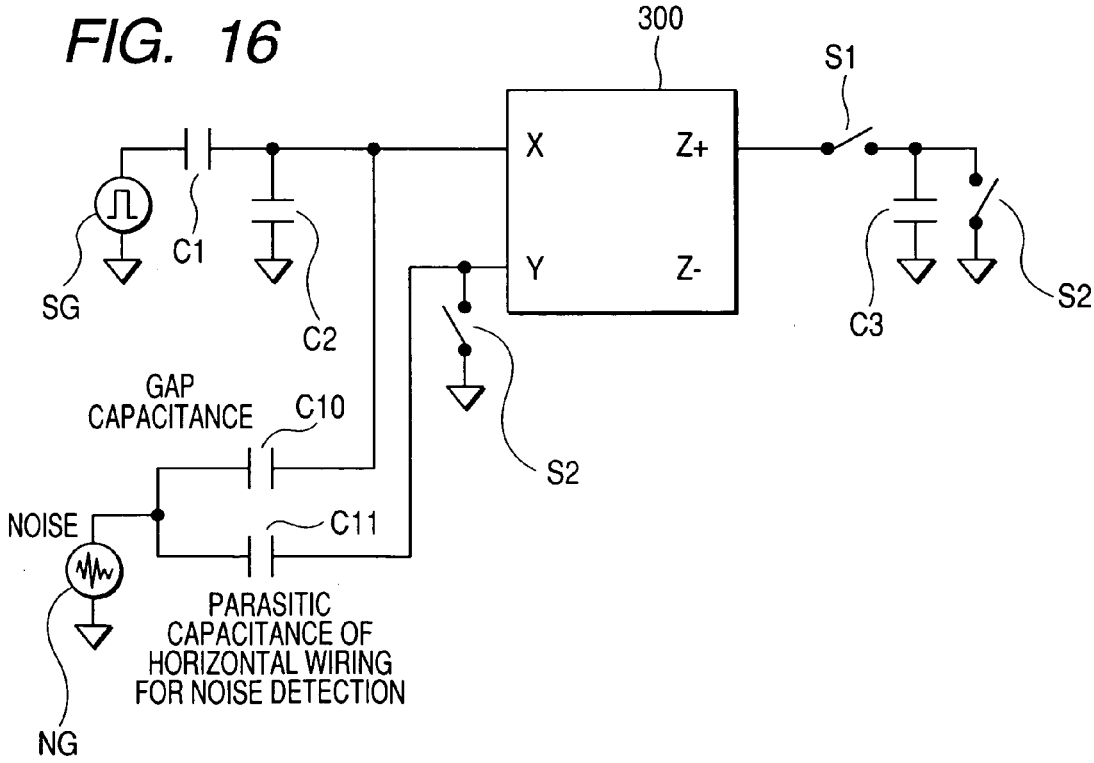
300
S1
X
Z+
Y
Z-
SG
C1
C2
C3
S2
S2
GAP
CAPACITANCE
C10
NOISE
C11
PARASITIC
CAPACITANCE OF
HORIZONTAL WIRING
FOR NOISE DETECTION
NG