FIG. 17A
PRIOR ART

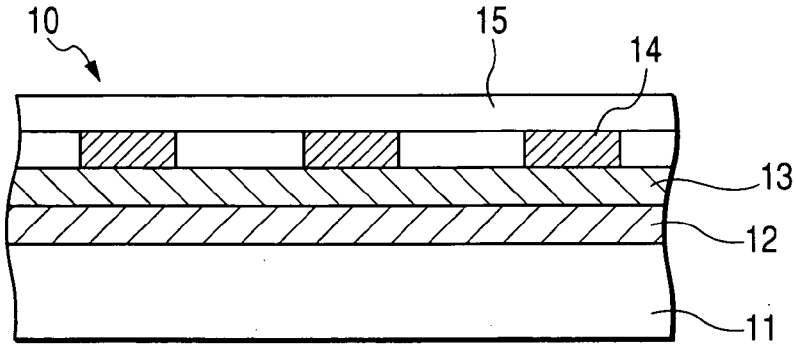
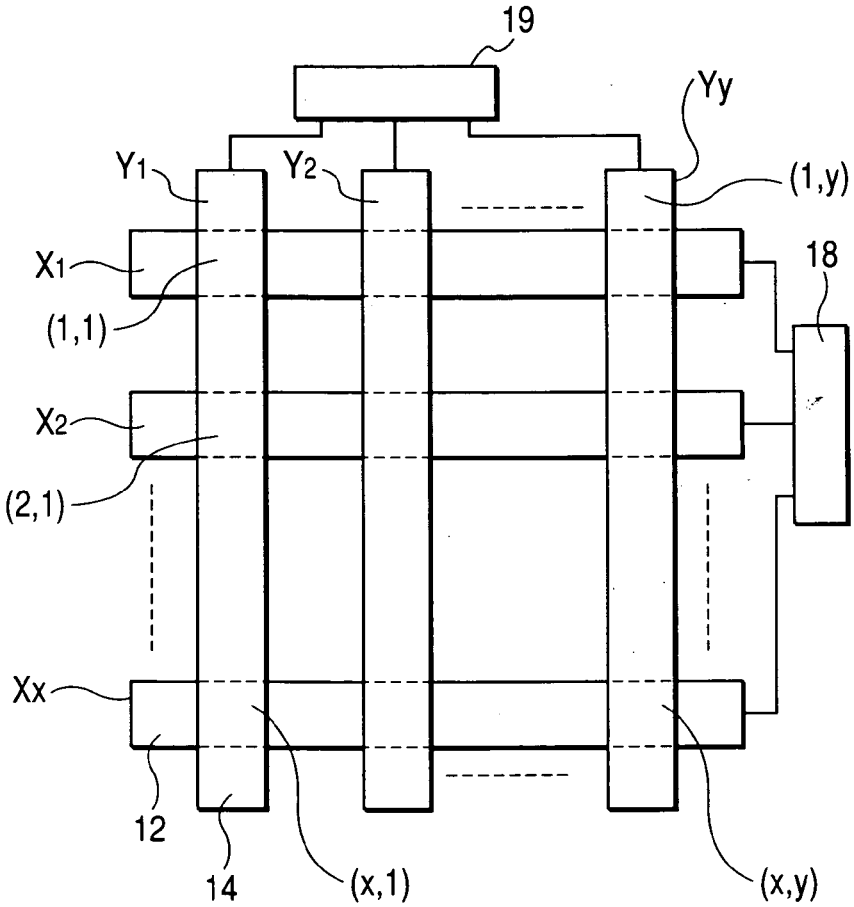
FIG. 17B
PRIOR ART