FIG. 5A

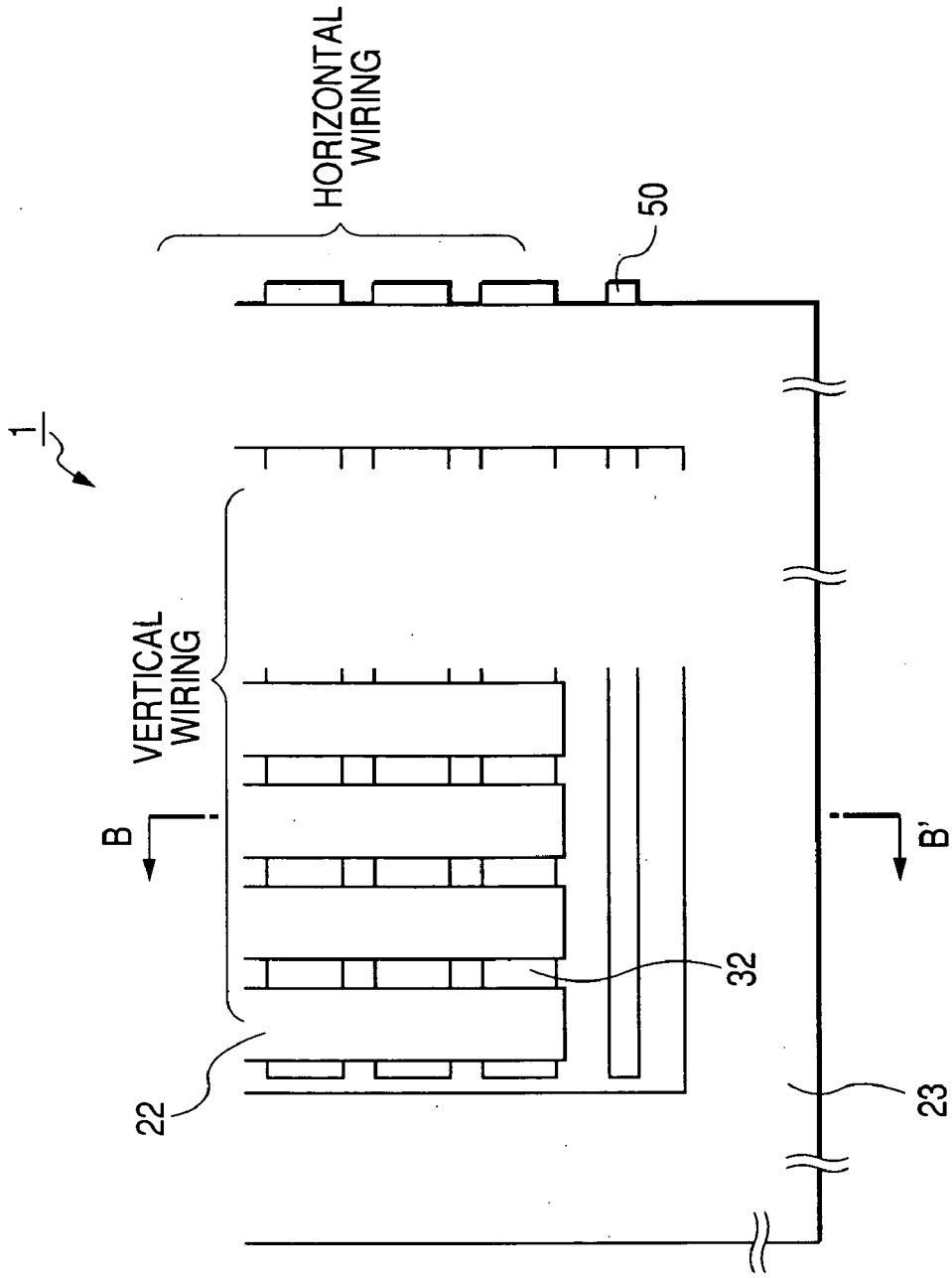
HORIZONTAL WIRING
50
1
VERTICAL WIRING
B
B'
32
22
23

FIG. 5B

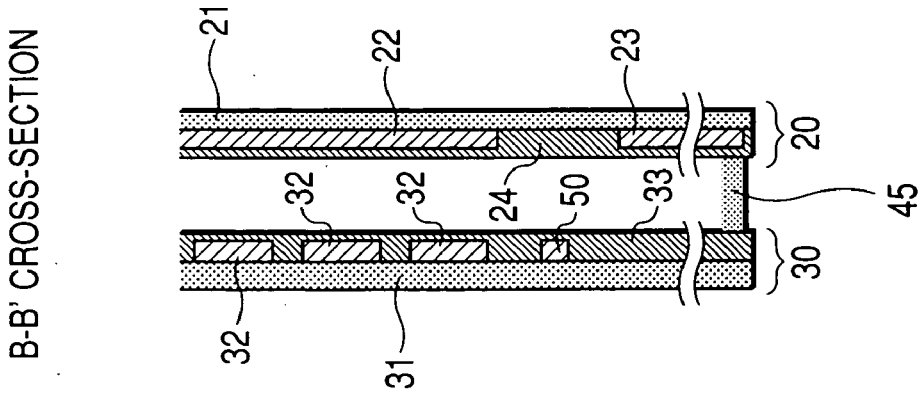
B-B' CROSS-SECTION
21
22
23
20
32
32
24
50
33
45
30
32
31