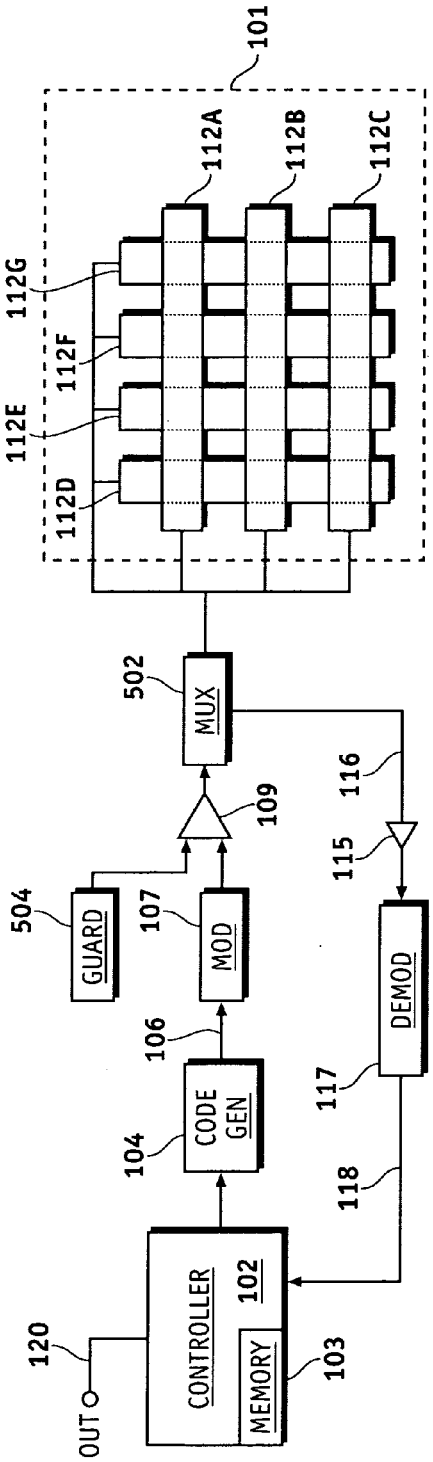
101
112A
112B
112C
112G
112F
112E
112D
502
MUX
109
116
115
504
GUARD
107
MOD
DEMOD
106
117
104
CODE GEN
118
120
OUT
CONTROLLER
102
MEMORY
103

FIG. 5

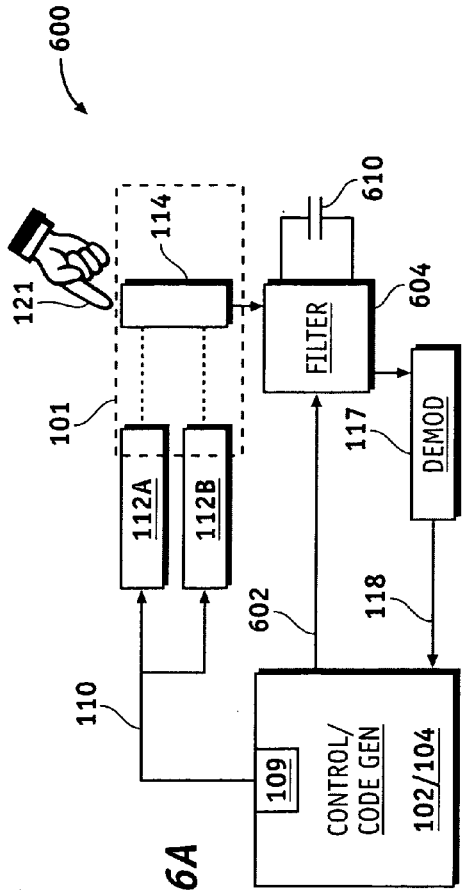
600
610
114
121
604
FILTER
101
117
DEMOD
112A
112B
602
118
110
109
CONTROL/
CODE GEN
102/104

FIG. 6A