FIG. 1

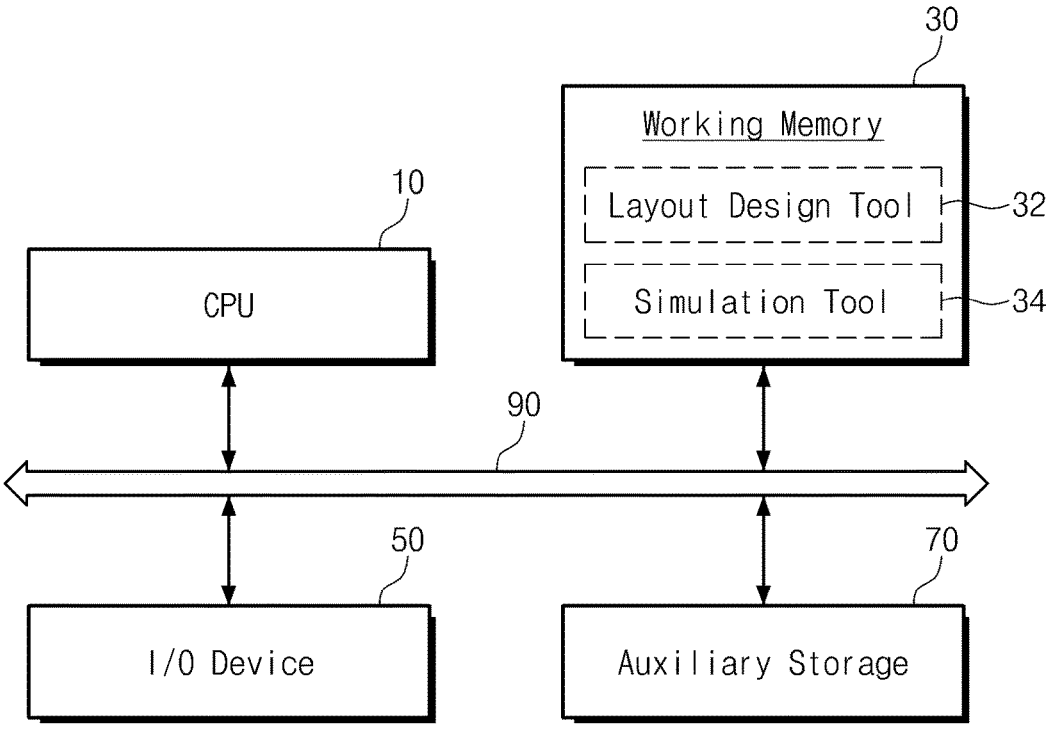
30
Working Memory
Layout Design Tool
32
Simulation Tool
34
10
CPU
90
50
I/O Device
70
Auxiliary Storage