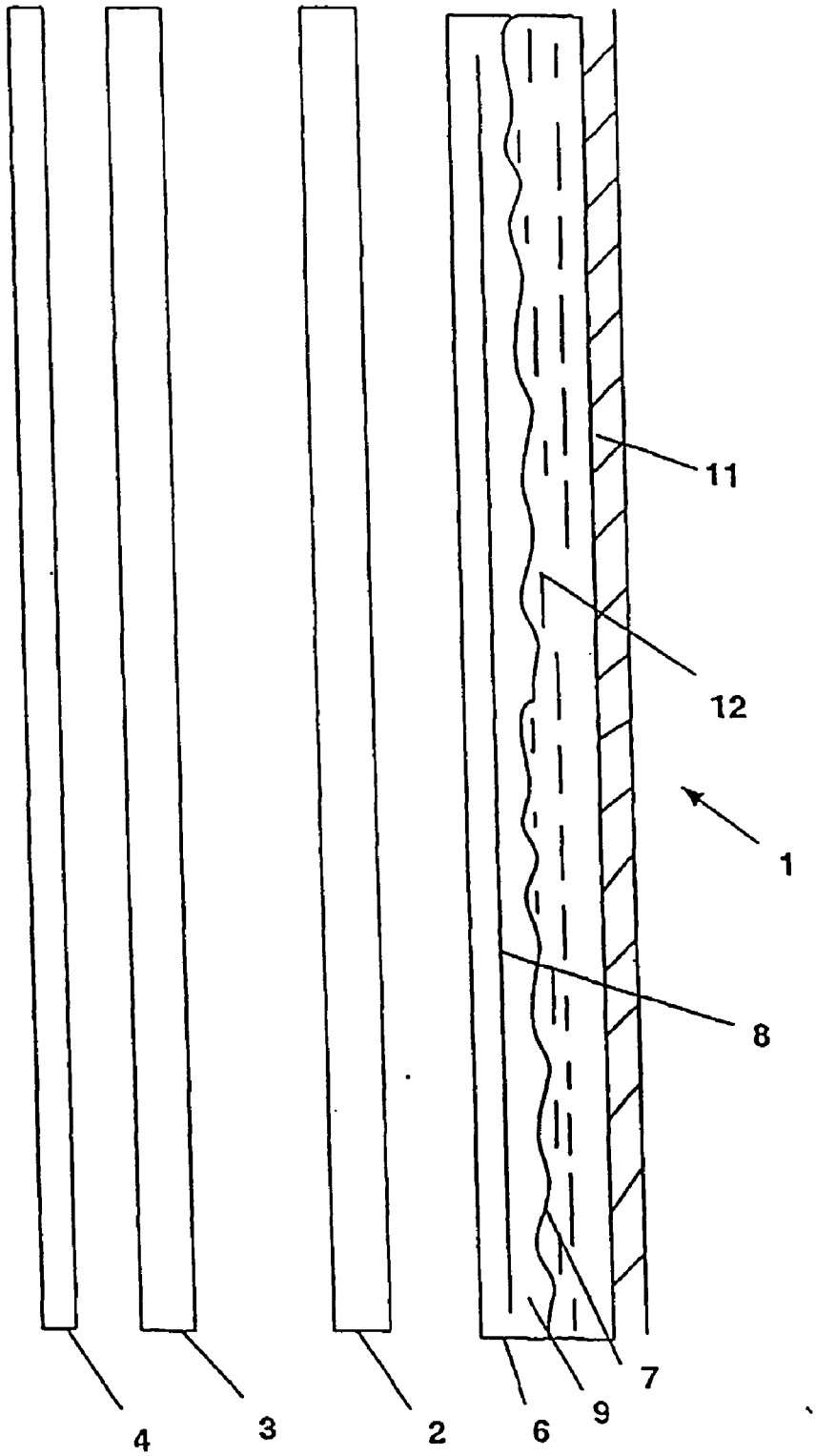Figure 2