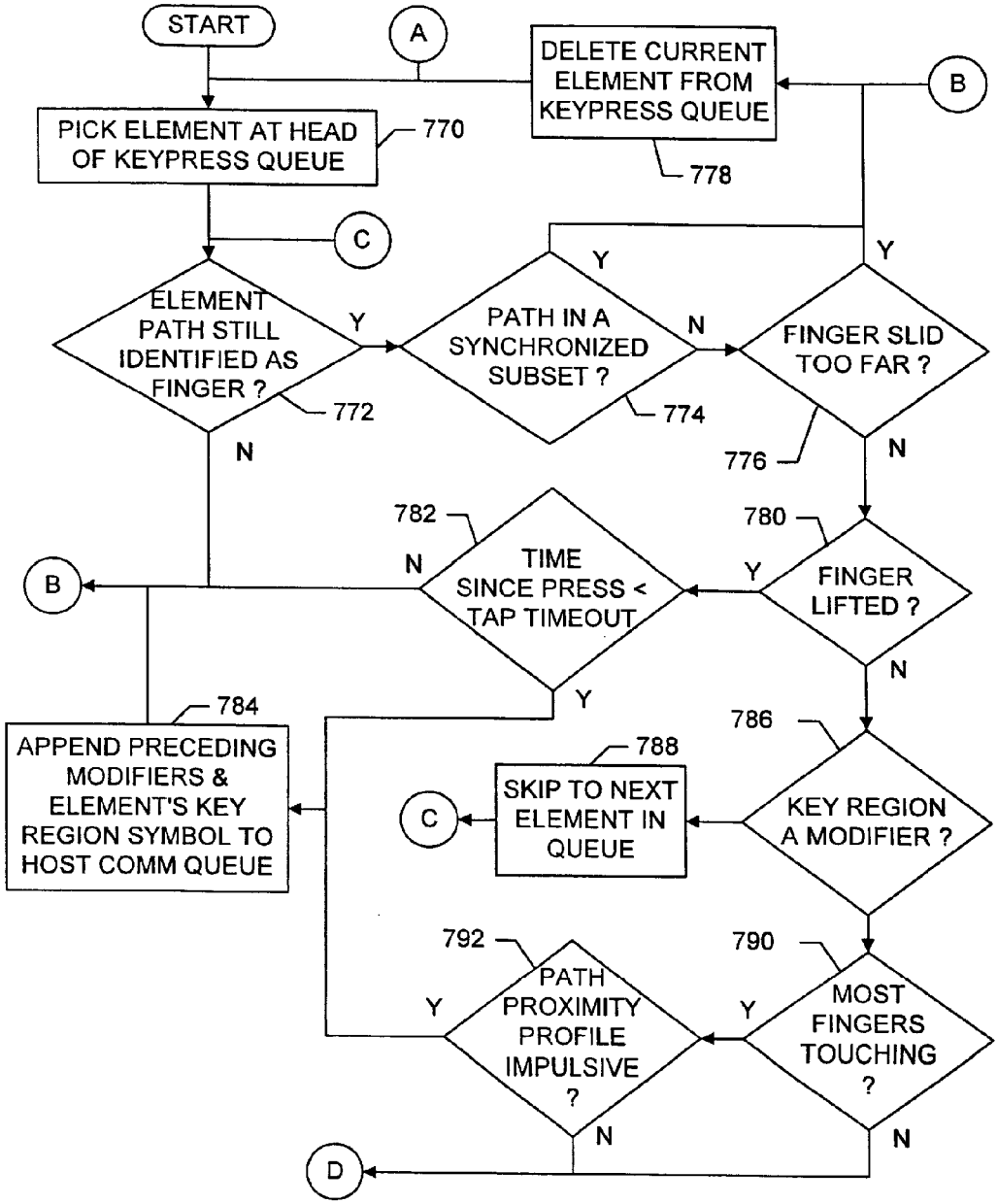
START
A
DELETE CURRENT ELEMENT FROM KEYPRESS QUEUE
B
PICK ELEMENT AT HEAD OF KEYPRESS QUEUE
770
778
C
ELEMENT PATH STILL IDENTIFIED AS FINGER ?
Y
PATH IN A SYNCHRONIZED SUBSET ?
N
FINGER SLID TOO FAR ?
Y
Y
772
774
776
N
N
782
780
B
N
TIME SINCE PRESS < TAP TIMEOUT
Y
FINGER LIFTED ?
N
Y
784
786
APPEND PRECEDING MODIFIERS & ELEMENT'S KEY REGION SYMBOL TO HOST COMM QUEUE
788
C
SKIP TO NEXT ELEMENT IN QUEUE
KEY REGION A MODIFIER ?
792
790
Y
PATH PROXIMITY PROFILE IMPULSIVE ?
Y
MOST FINGERS TOUCHING ?
N
N
D

FIG. 43A