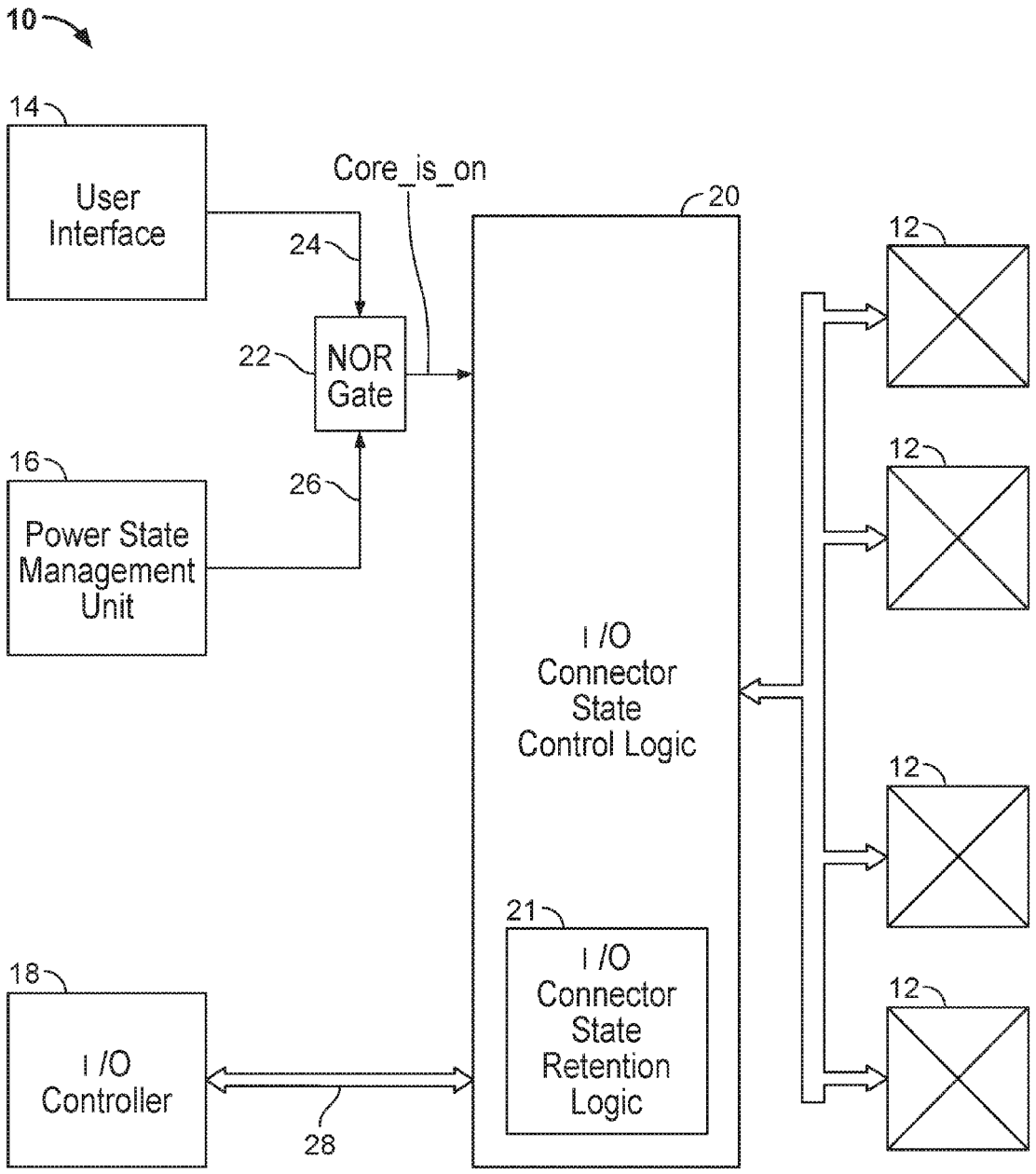
10
14
User Interface
Core_is_on
20
24
12
22
NOR Gate
12
16
26
Power State Management Unit
I /O Connector State Control Logic
12
21
I /O Connector State Retention Logic
18
I /O Controller
12
28

FIG. 1