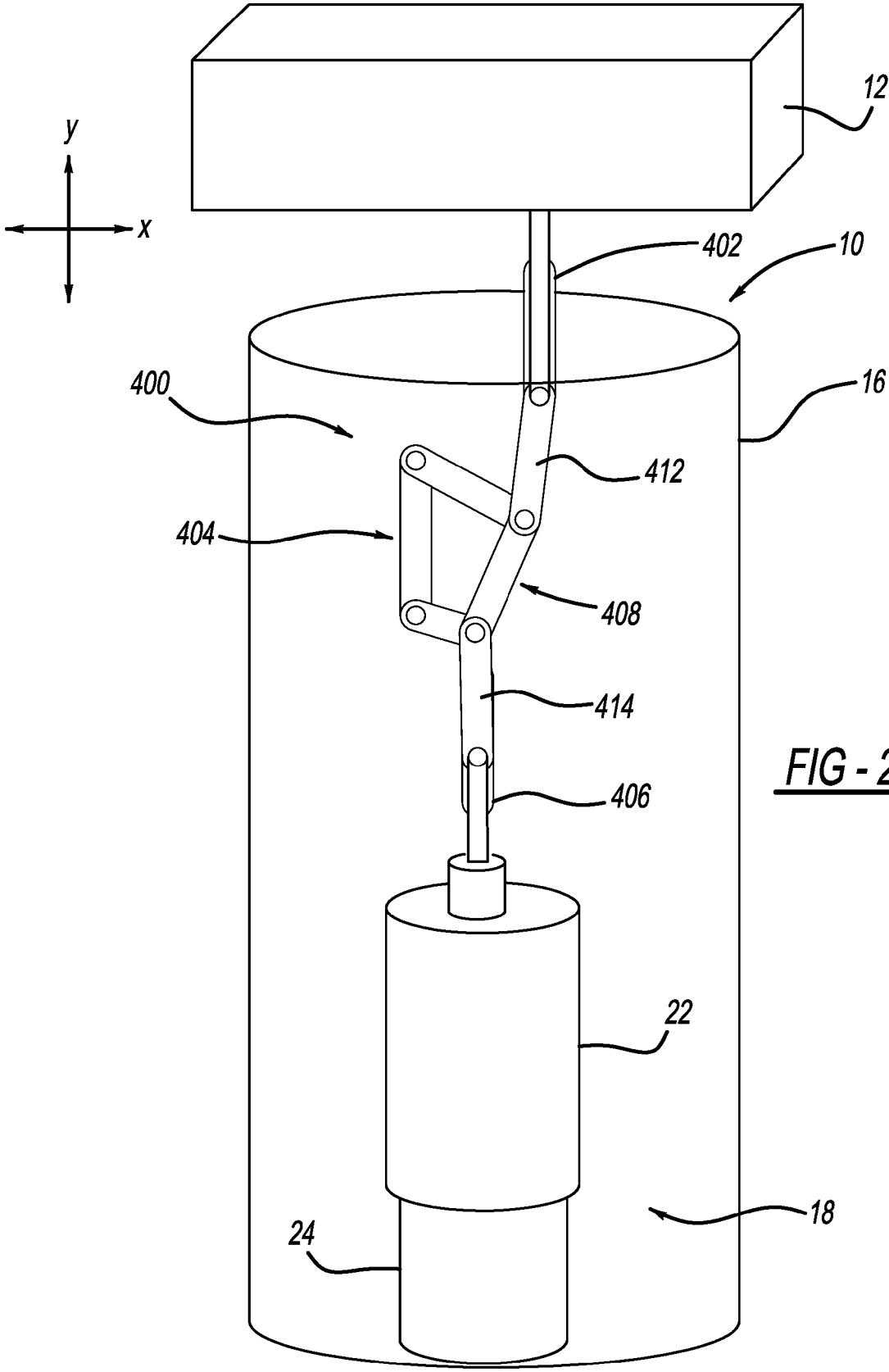

FIG - 21