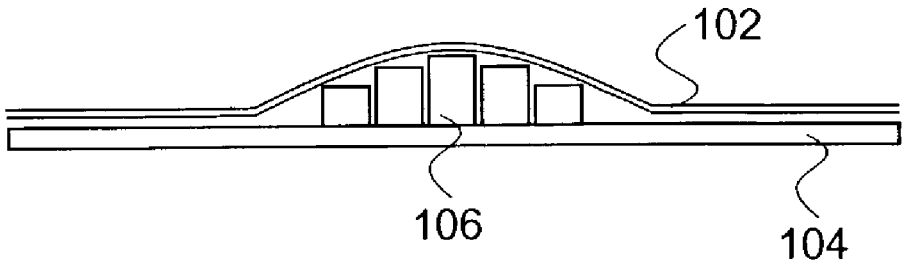

Figure 5

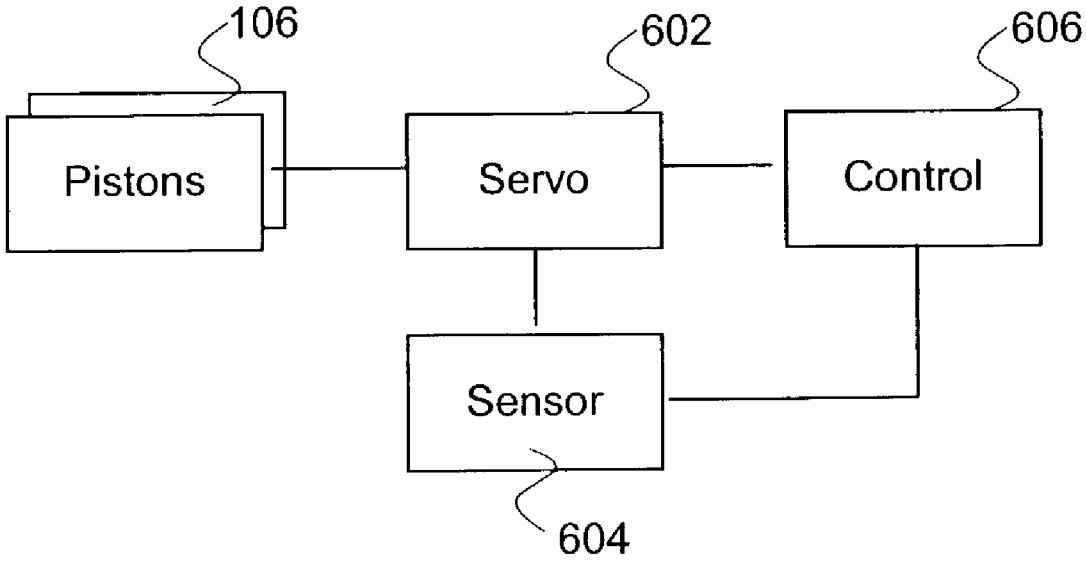

Figure 6