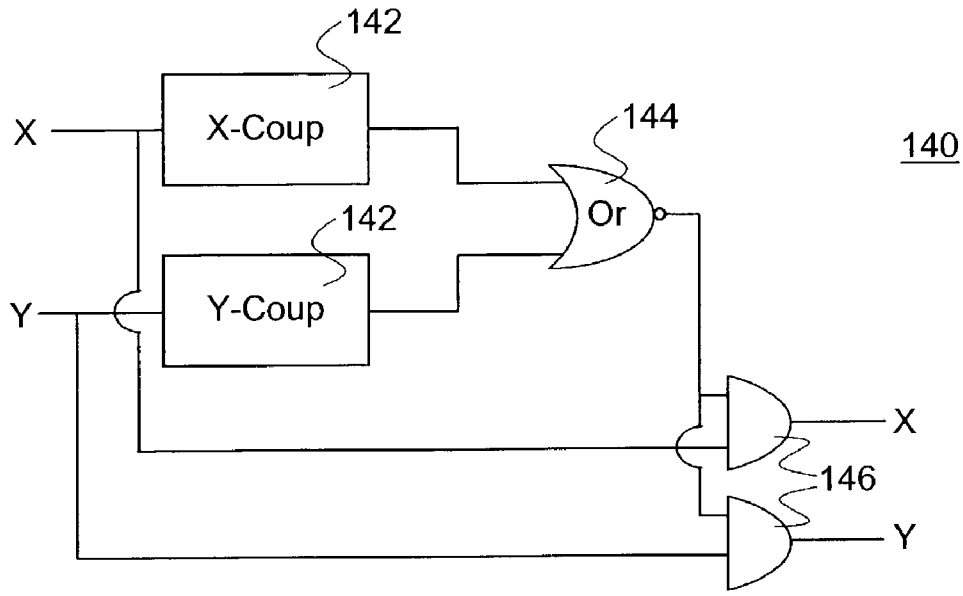


Figure 9

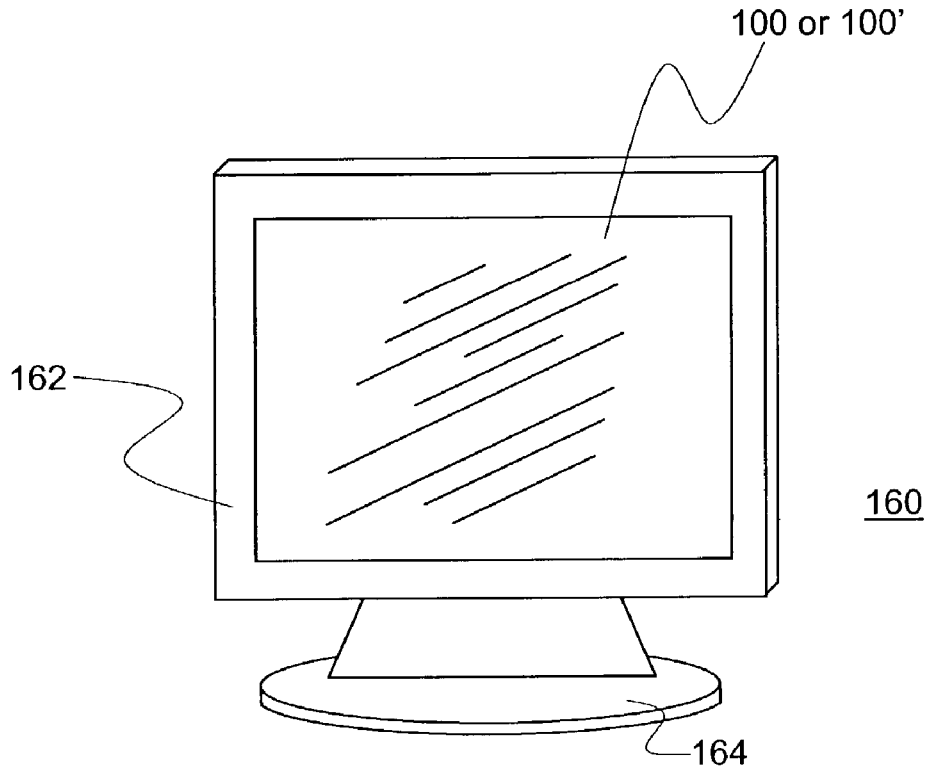


Figure 10