FIG. 4

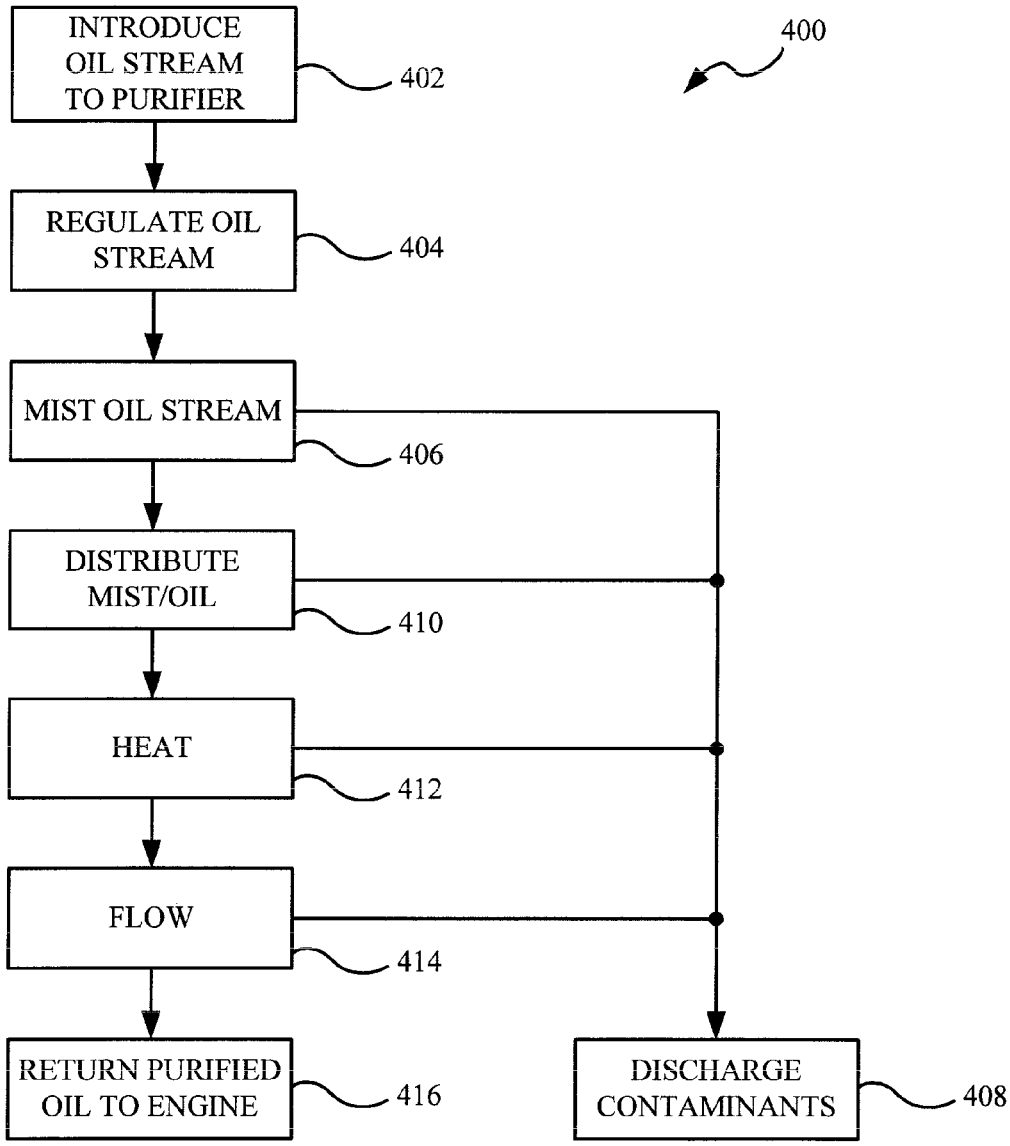
INTRODUCE OIL STREAM TO PURIFIER
402
400
REGULATE OIL STREAM
404
MIST OIL STREAM
406
DISTRIBUTE MIST/OIL
410
HEAT
412
FLOW
414
RETURN PURIFIED OIL TO ENGINE
416
DISCHARGE CONTAMINANTS
408