FIG. 1

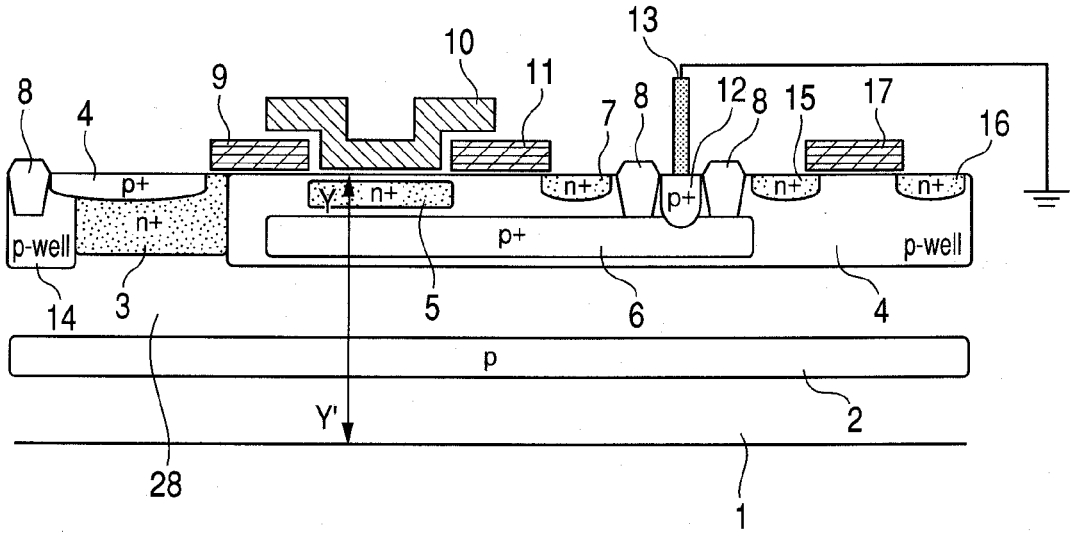
13
10
11
9
8
4
7
8
12
8
15
17
16
p+
n+
n+
n+
n+
p+
p+
p-well
p-well
Y
14
3
5
6
4
p
2
Y'
28
1

FIG. 2

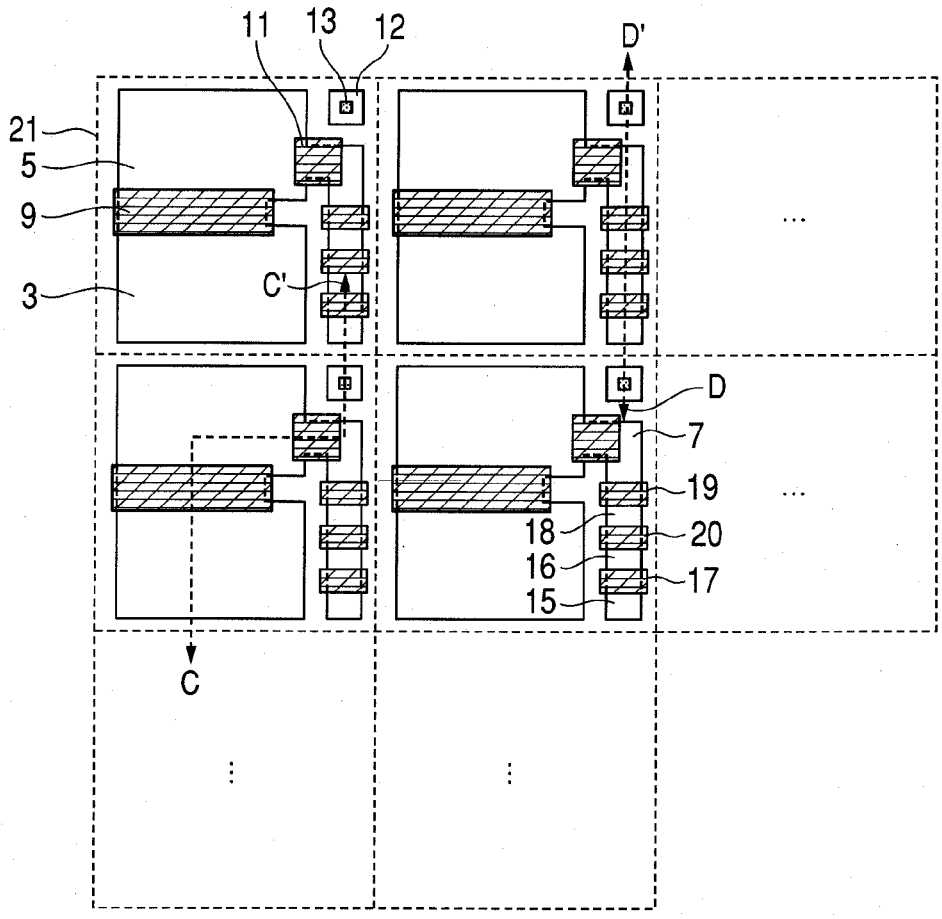
11
13
12
D'
21
5
9
3
C'
D
7
19
18
20
16
17
15
C