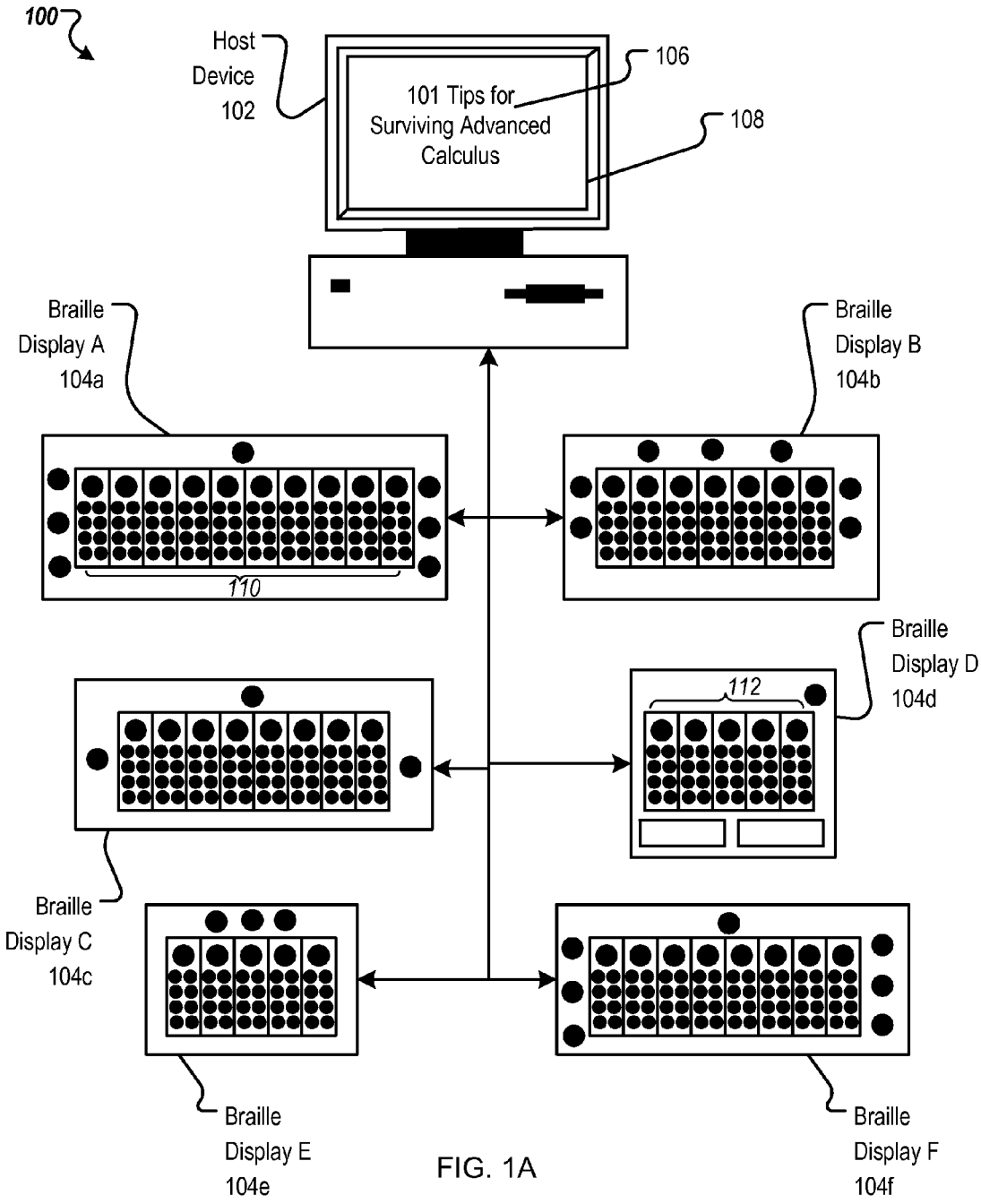
100
Host
Device
102
101 Tips for
Surviving Advanced
Calculus
106
108
Braille
Display A
104a
110
Braille
Display B
104b
Braille
Display D
104d
112
Braille
Display C
104c
Braille
Display E
104e
Braille
Display F
104f

FIG. 1A