Figure 14

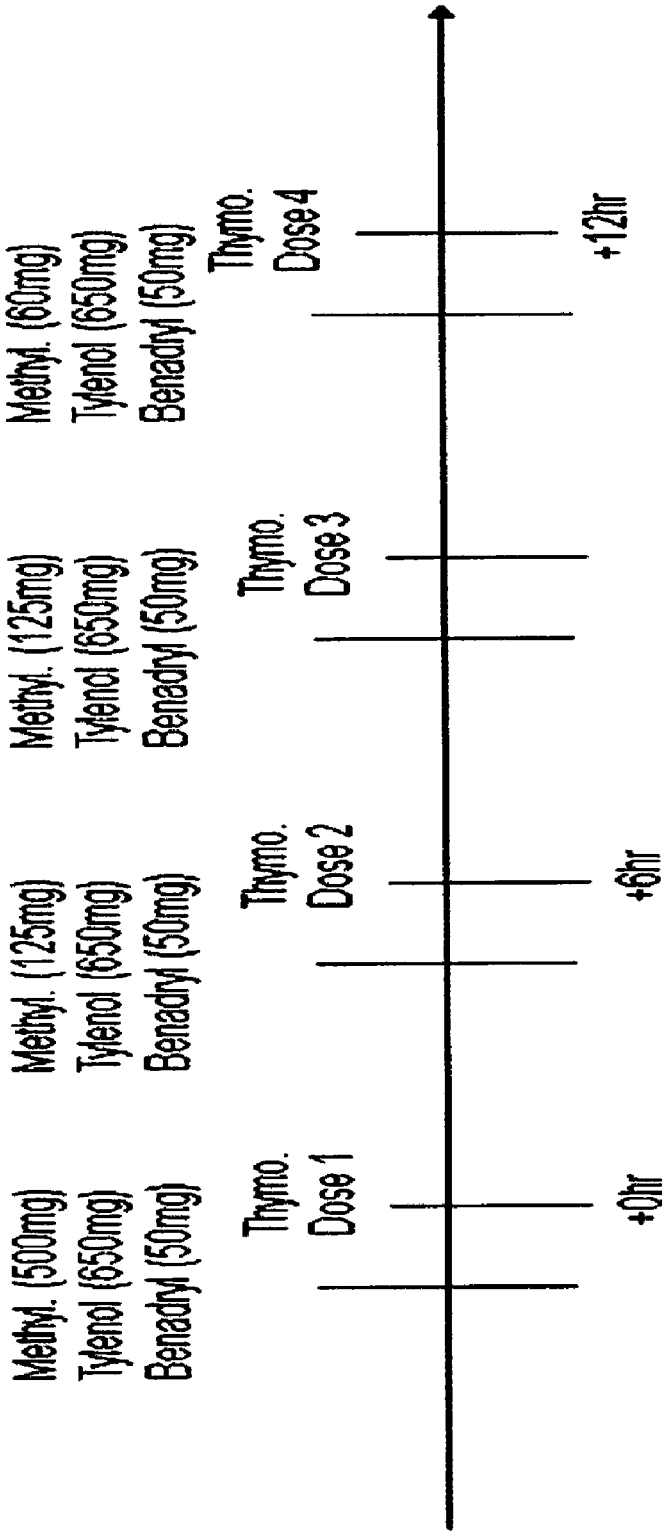
Methyl. (500mg)
Tylenol (650mg)
Benadryl (50mg)
Thymo.
Dose 1
Methyl. (125mg)
Tylenol (650mg)
Benadryl (50mg)
Thymo.
Dose 2
Methyl. (125mg)
Tylenol (650mg)
Benadryl (50mg)
Thymo.
Dose 3
Methyl. (60mg)
Tylenol (650mg)
Benadryl (50mg)
Thymo.
Dose 4
+0hr
+6hr
+12hr