FIG. 1

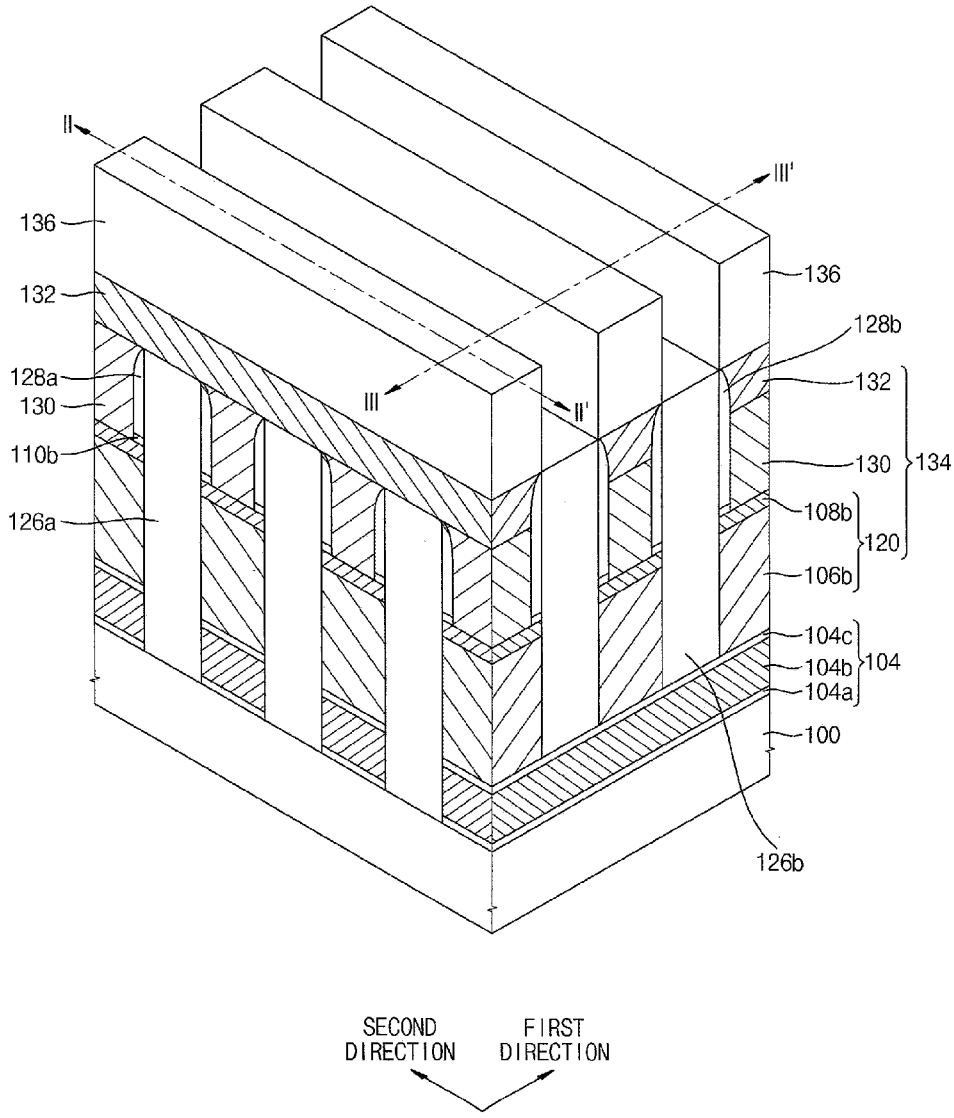
II
III'
136
132
128a
130
110b
126a
III
II'
136
128b
132
130
134
108b
120
106b
104c
104b
104
104a
100
126b
SECOND DIRECTION
FIRST DIRECTION