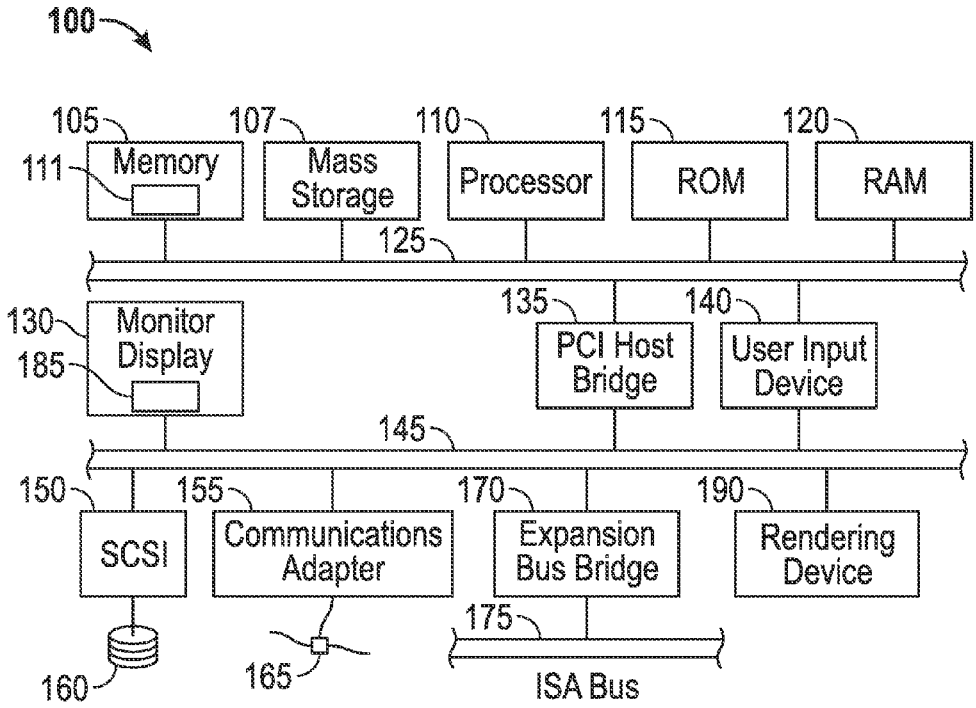
100
105
Memory
111
107
Mass Storage
110
Processor
115
ROM
120
RAM
125
130
Monitor Display
185
135
PCI Host Bridge
140
User Input Device
145
150
SCSI
155
Communications Adapter
170
Expansion Bus Bridge
190
Rendering Device
175
160
165
ISA Bus

FIG. 1

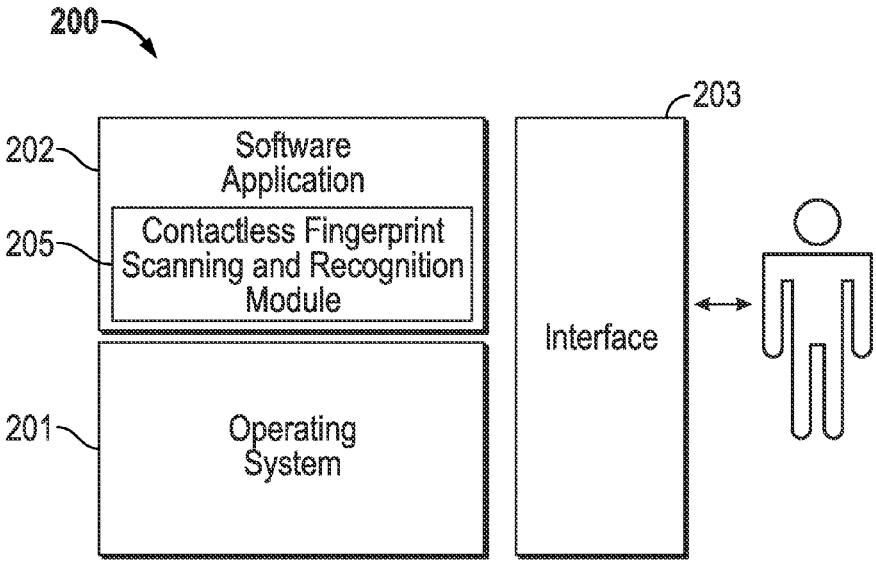
200
202
Software Application
205
Contactless Fingerprint Scanning and Recognition Module
201
Operating System
203
Interface

FIG. 2