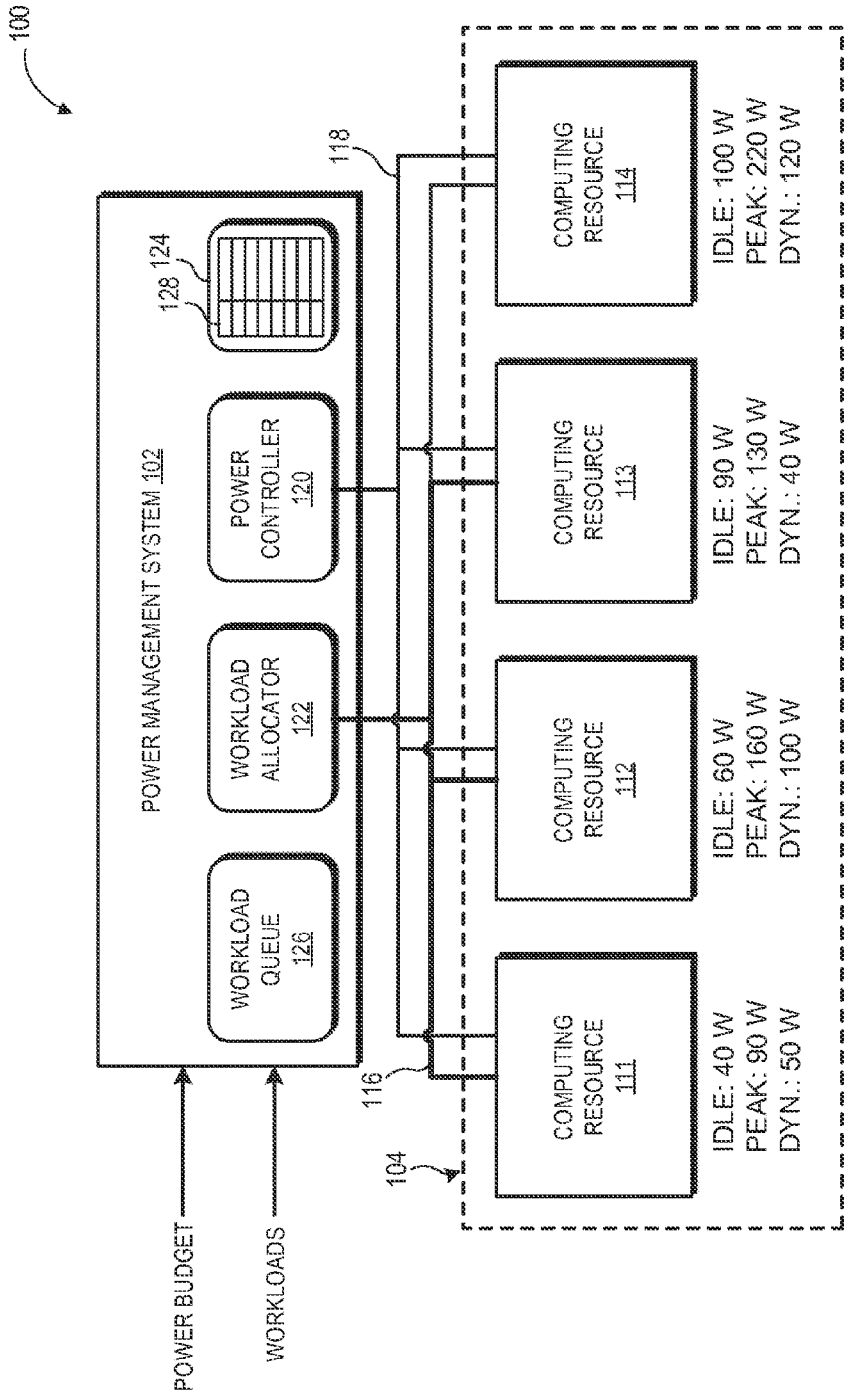
100
POWER MANAGEMENT SYSTEM 102
WORKLOAD QUEUE 126
WORKLOAD ALLOCATOR 122
POWER CONTROLLER 120
128
124
118
116
104
POWER BUDGET
WORKLOADS
COMPUTING RESOURCE 111
IDLE: 40 W
PEAK: 90 W
DYN.: 50 W
COMPUTING RESOURCE 112
IDLE: 60 W
PEAK: 160 W
DYN.: 100 W
COMPUTING RESOURCE 113
IDLE: 90 W
PEAK: 130 W
DYN.: 40 W
COMPUTING RESOURCE 114
IDLE: 100 W
PEAK: 220 W
DYN.: 120 W

FIG. 1