FIG. 1

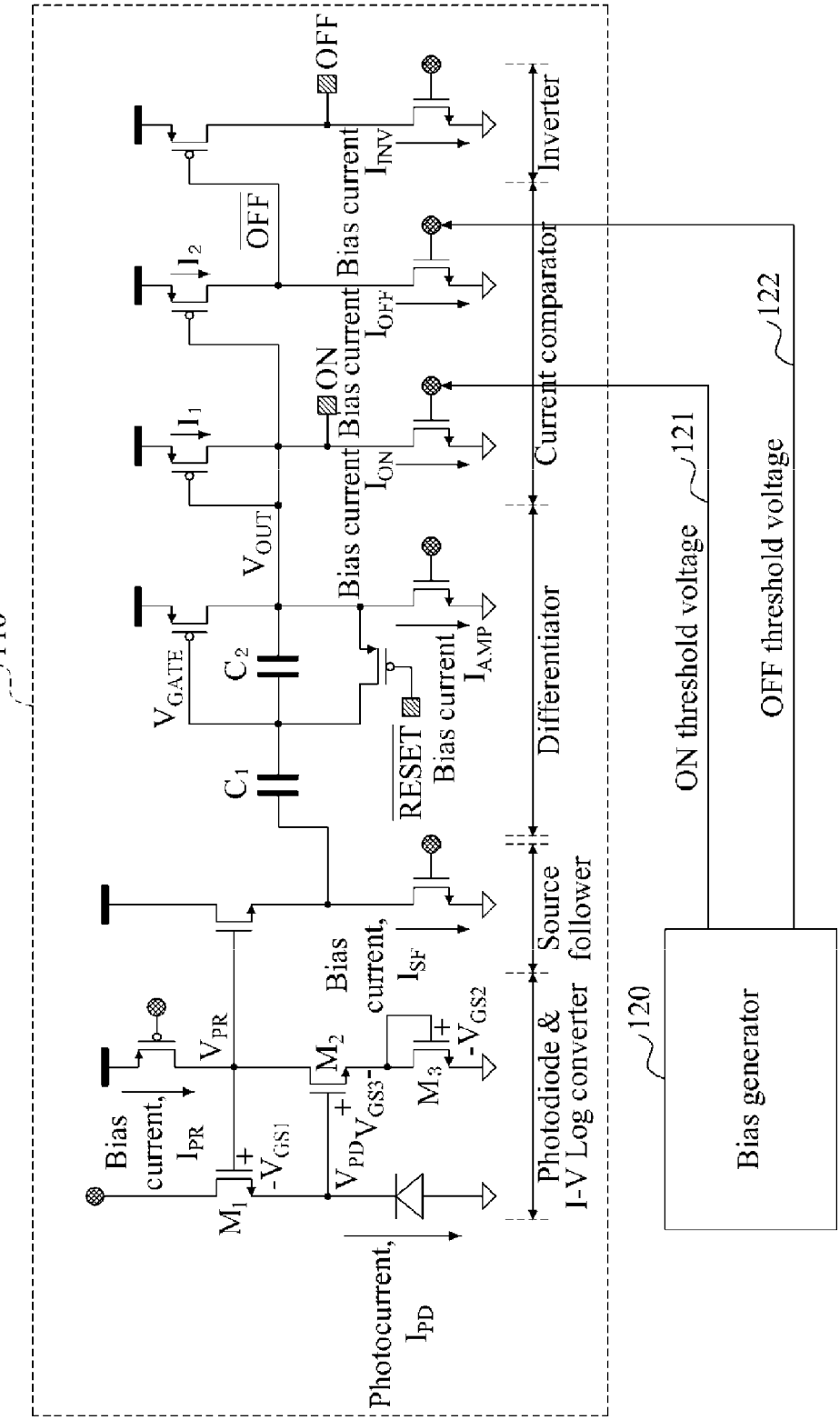
110
OFF
Inverter
Bias current
I_{INV}
$\overline{OFF}$
I_2
Bias current
I_{OFF}
Current comparator
122
ON
Bias current
I_1
I_{ON}
121
V_{OUT}
Bias current
V_{GATE}
C_2
I_{AMP}
Differentiator
ON threshold voltage
OFF threshold voltage
C_1
$\overline{RESET}$
Bias current
Source follower
Bias current, I_{SF}
V_{PR}
M_2
$-V_{GS2}$
120
Bias generator
Bias current, I_{PR}
$-V_{GS1}$
V_{PD}
V_{GS3}
M_3
M_1
Photodiode & I-V Log converter
Photocurrent, I_{PD}