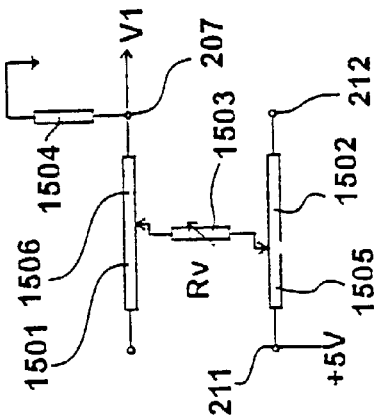

Figure 15A

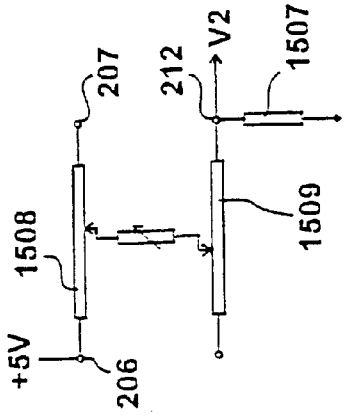

Figure 15B

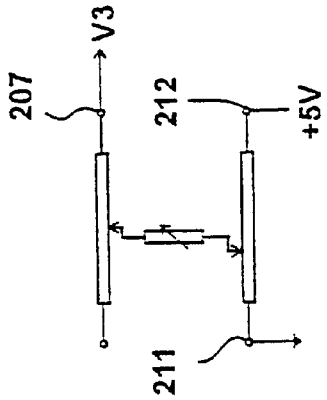

Figure 15C

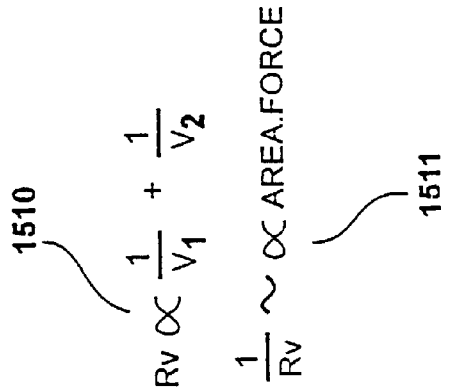

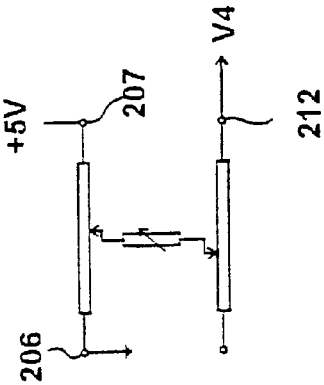

Figure 15D