Fig. 2

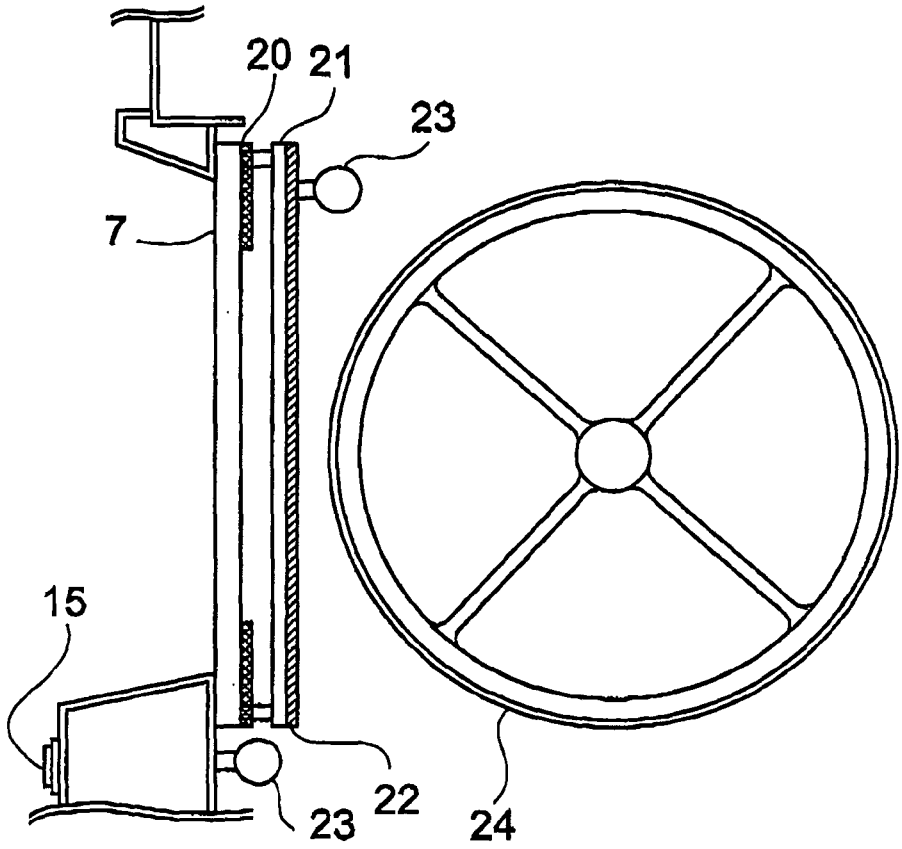
20
21
23
7
15
23
22
24

Fig. 3

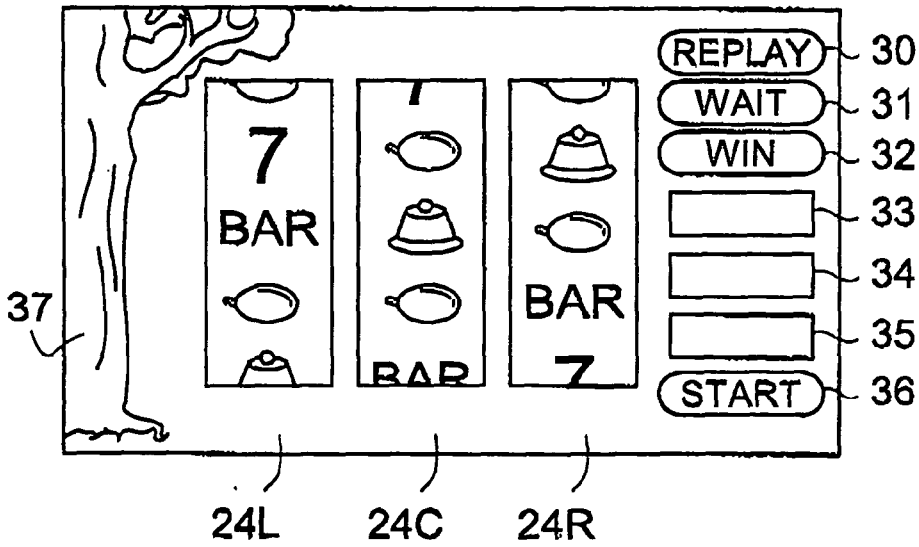
REPLAY
30
WAIT
31
WIN
32
33
34
35
START
36
7
BAR
BAR
7
37
24L
24C
24R