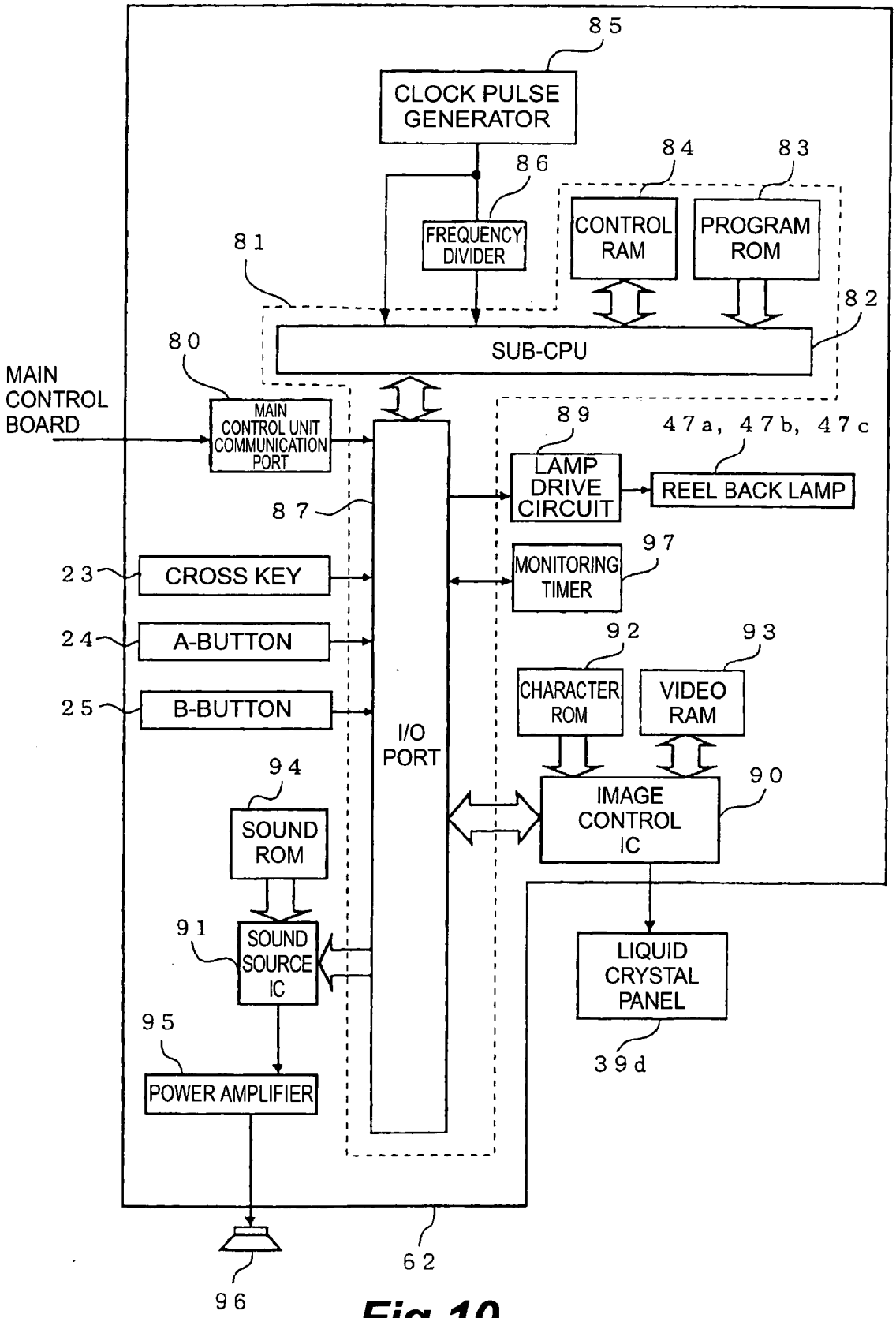
85
CLOCK PULSE GENERATOR
86
FREQUENCY DIVIDER
84
CONTROL RAM
83
PROGRAM ROM
81
82
SUB-CPU
80
MAIN CONTROL BOARD
MAIN CONTROL UNIT COMMUNICATION PORT
89
LAMP DRIVE CIRCUIT
47a, 47b, 47c
REEL BACK LAMP
87
I/O PORT
97
MONITORING TIMER
23
CROSS KEY
24
A-BUTTON
25
B-BUTTON
92
CHARACTER ROM
93
VIDEO RAM
94
SOUND ROM
90
IMAGE CONTROL IC
91
SOUND SOURCE IC
LIQUID CRYSTAL PANEL
39d
95
POWER AMPLIFIER
62
96

Fig.10