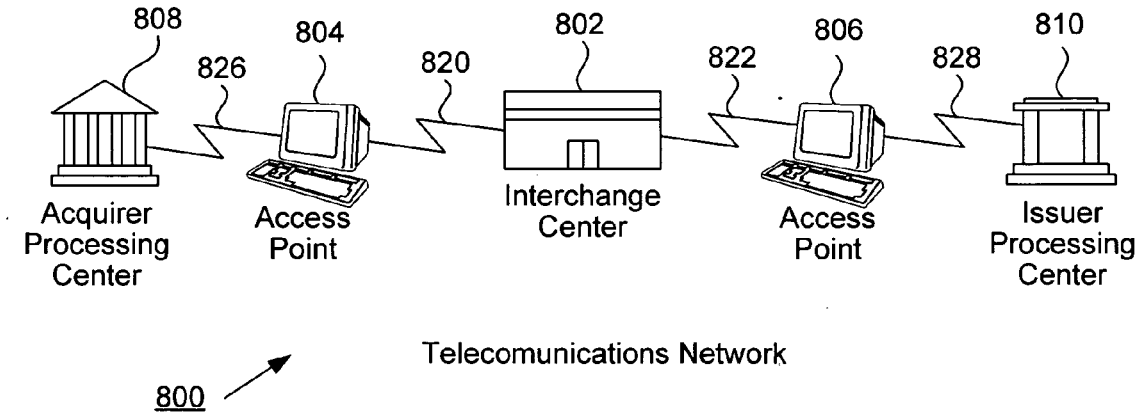
808
804
802
806
810
826
820
822
828
Acquirer Processing Center
Access Point
Interchange Center
Access Point
Issuer Processing Center
Telecomunications Network
800

FIG. 9

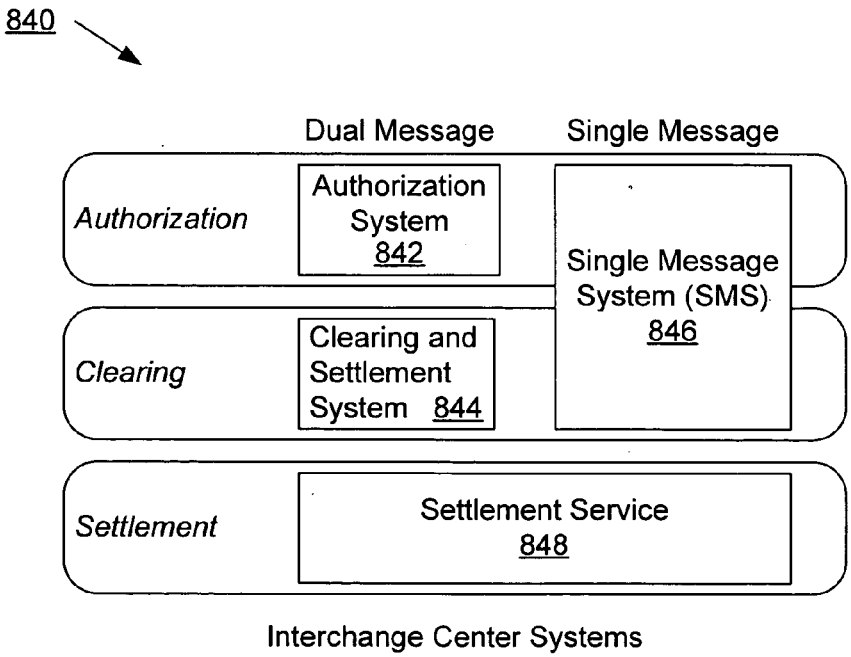
840
Dual Message
Single Message
Authorization
Authorization System 842
Single Message System (SMS) 846
Clearing
Clearing and Settlement System 844
Settlement
Settlement Service 848
Interchange Center Systems

FIG. 10