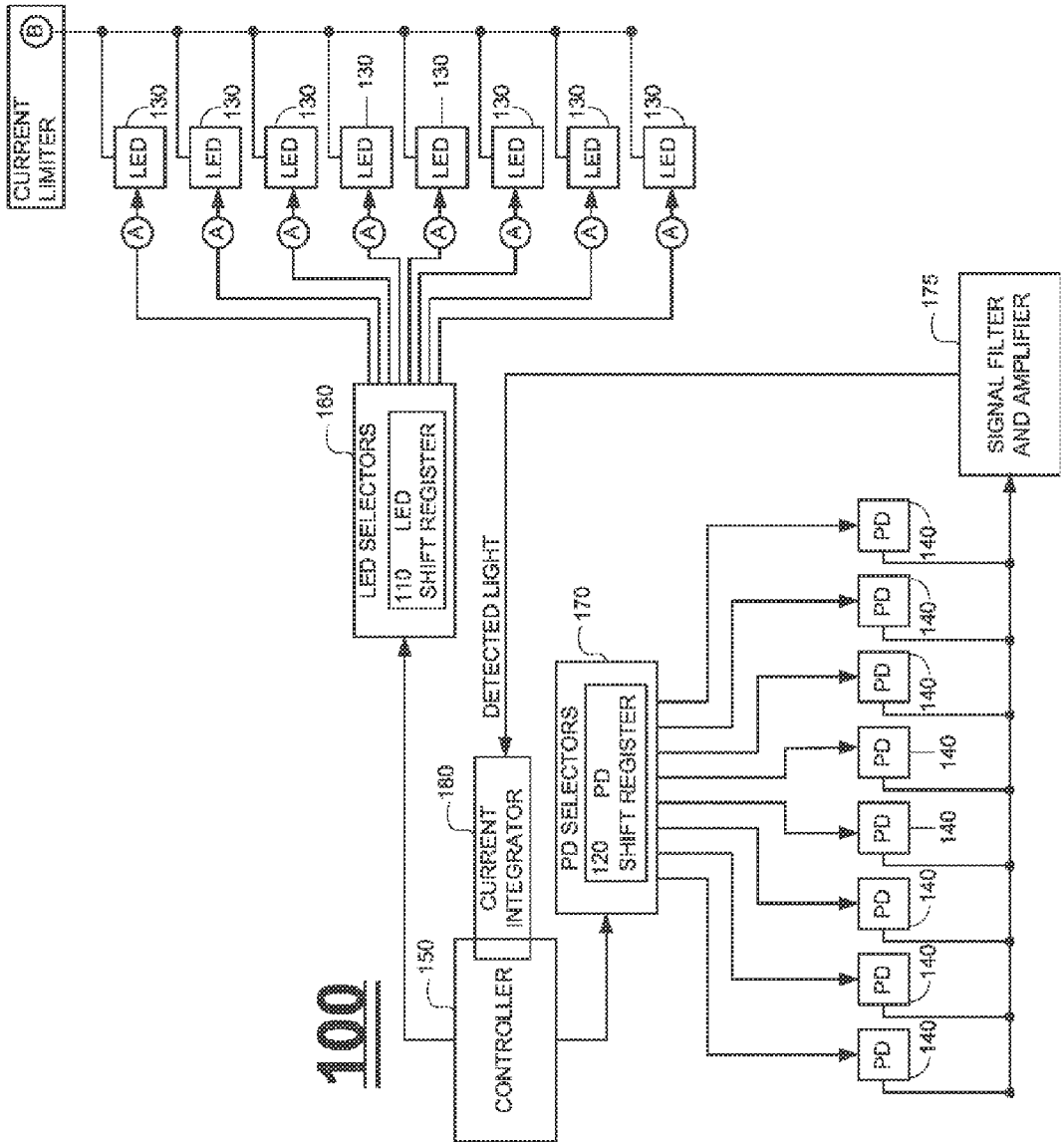
100
CURRENT LIMITER
B
LED
130
A
160
LED SELECTORS
110 LED SHIFT REGISTER
150
CONTROLLER
180
CURRENT INTEGRATOR
DETECTED LIGHT
170
PD SELECTORS
120 PD SHIFT REGISTER
PD
140
175
SIGNAL FILTER AND AMPLIFIER

FIG. 6A