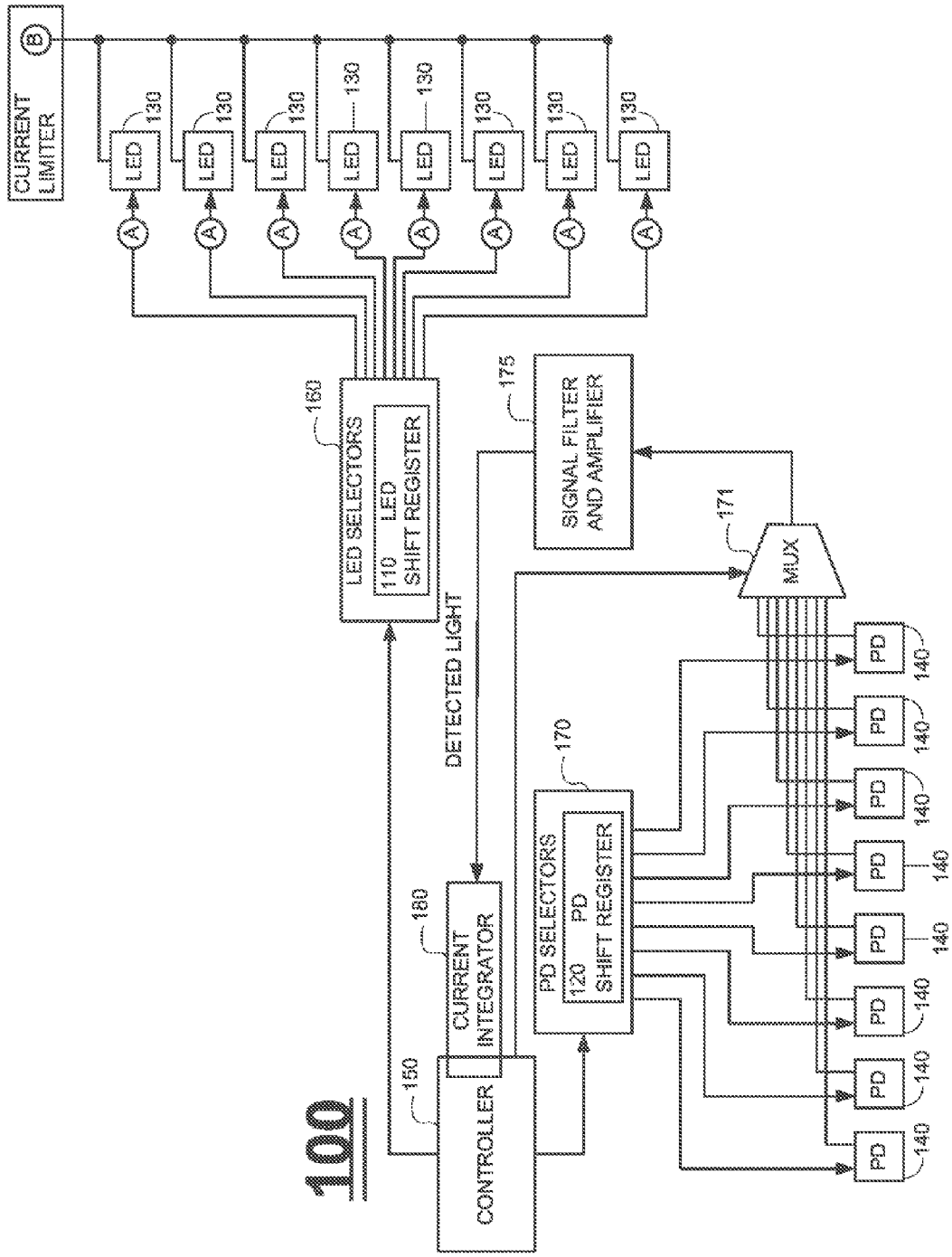
100
CURRENT LIMITER
B
LED
130
A
LED SELECTORS
160
110 LED SHIFT REGISTER
SIGNAL FILTER AND AMPLIFIER
175
MUX
171
DETECTED LIGHT
PD SELECTORS
170
120 PD SHIFT REGISTER
CURRENT INTEGRATOR
180
CONTROLLER
150
PD
140

FIG. 6B