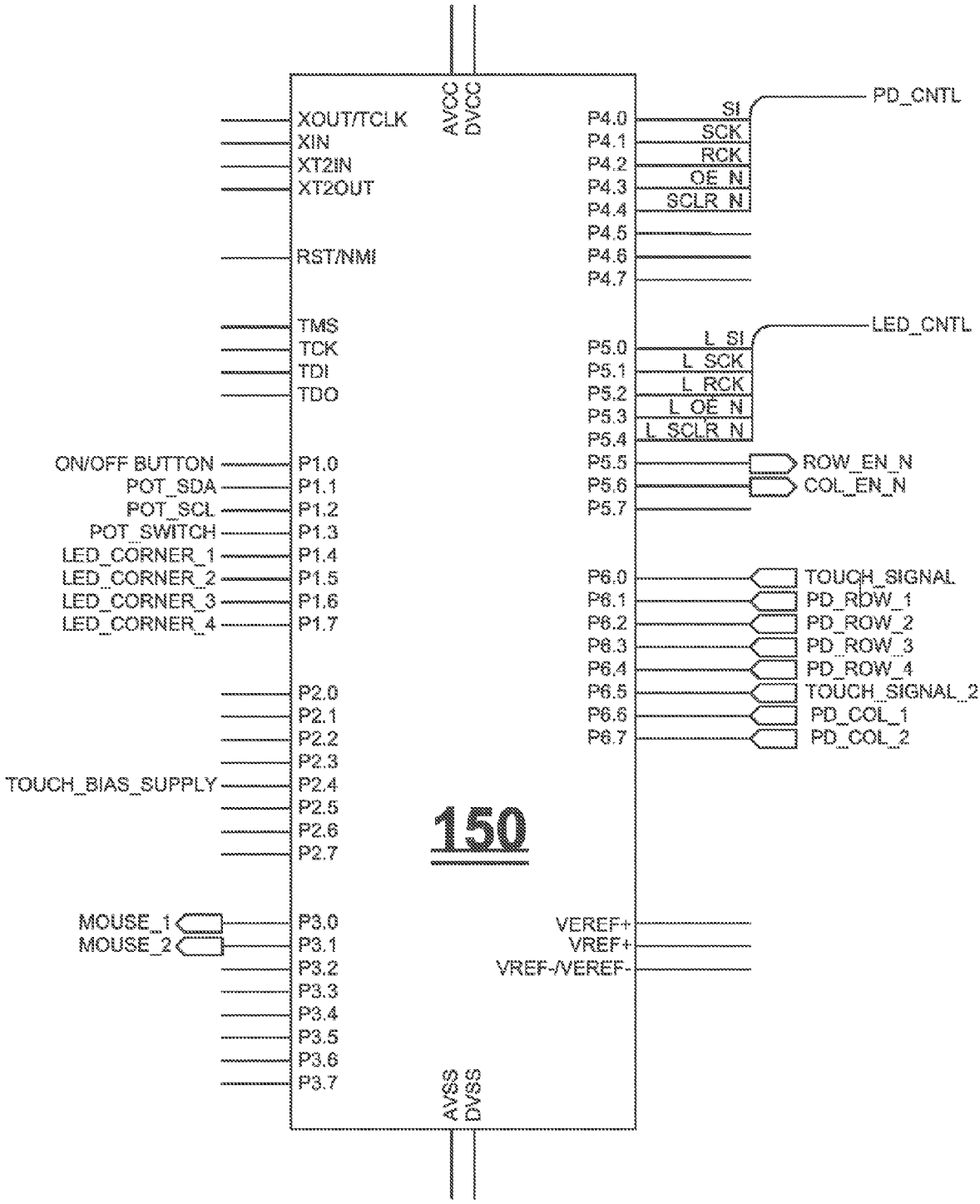
AVCC
DVCC
XOUT/TCLK
XIN
XT2IN
XT2OUT
RST/NMI
TMS
TCK
TDI
TDO
ON/OFF BUTTON
POT_SDA
POT_SCL
POT_SWITCH
LED_CORNER_1
LED_CORNER_2
LED_CORNER_3
LED_CORNER_4
P1.0
P1.1
P1.2
P1.3
P1.4
P1.5
P1.6
P1.7
P2.0
P2.1
P2.2
P2.3
TOUCH_BIAS_SUPPLY
P2.4
P2.5
P2.6
P2.7
150
MOUSE_1
MOUSE_2
P3.0
P3.1
P3.2
P3.3
P3.4
P3.5
P3.6
P3.7
AVSS
DVSS
P4.0
P4.1
P4.2
P4.3
P4.4
P4.5
P4.6
P4.7
SI
SCK
RCK
OE_N
SCLR_N
PD_CNTL
P5.0
P5.1
P5.2
P5.3
P5.4
L_SI
L_SCK
L_RCK
L_OE_N
L_SCLR_N
LED_CNTL
P5.5
P5.6
P5.7
ROW_EN_N
COL_EN_N
P6.0
P6.1
P6.2
P6.3
P6.4
P6.5
P6.6
P6.7
TOUCH_SIGNAL
PD_ROW_1
PD_ROW_2
PD_ROW_3
PD_ROW_4
TOUCH_SIGNAL_2
PD_COL_1
PD_COL_2
VEREF+
VREF+
VREF-/VEREF-

FIG. 7