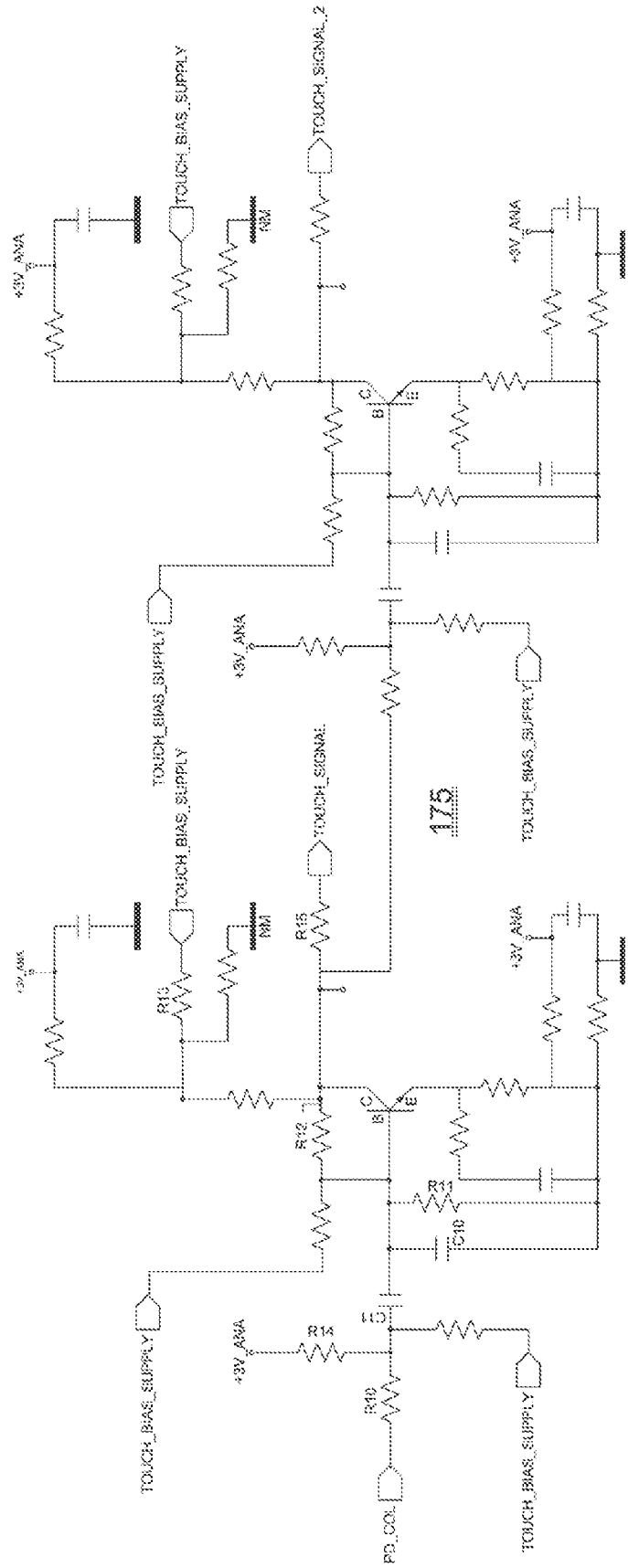
TOUCH_BIAS_SUPPLY
TOUCH_SIGNAL_2
+3V_ANA
NM
TOUCH_SIGNAL
R13
R15
R12
R11
C10
R14
R10
PD_COL
175

FIG. 23A