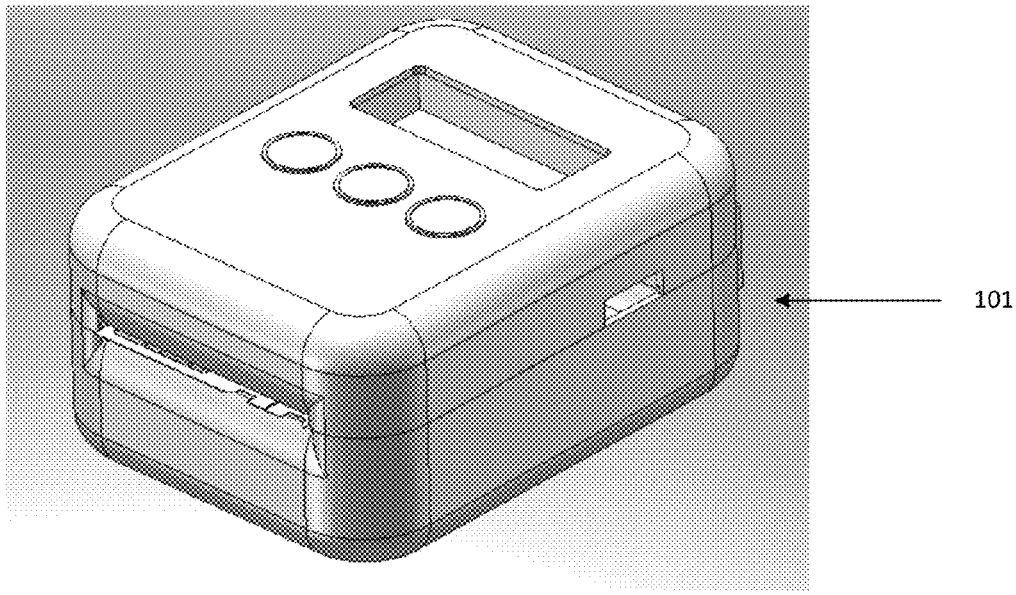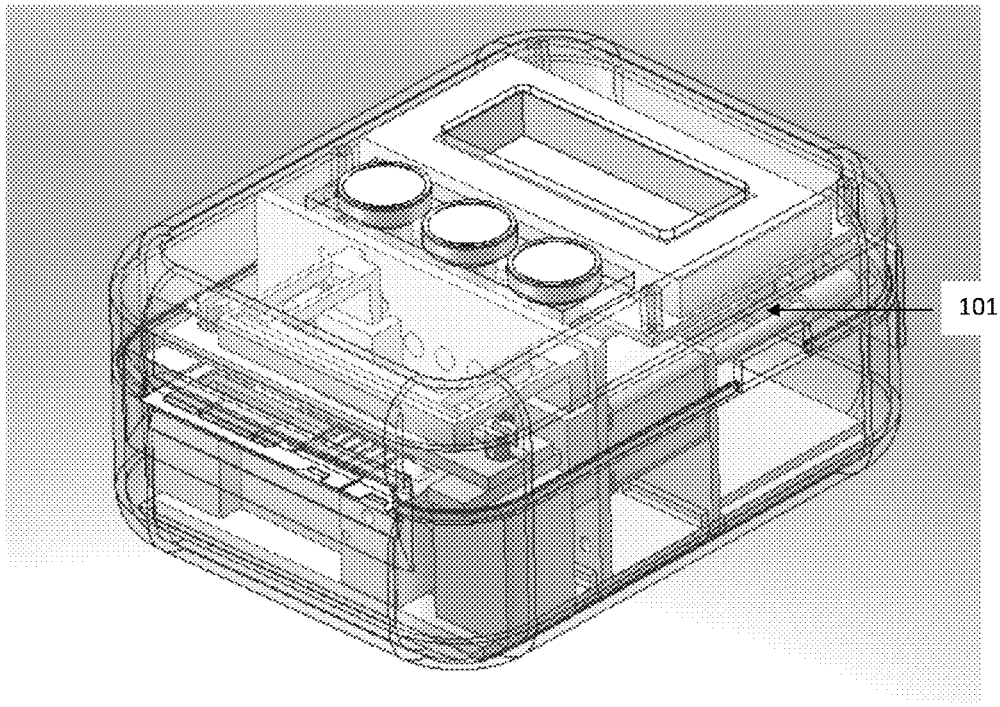Figure 12