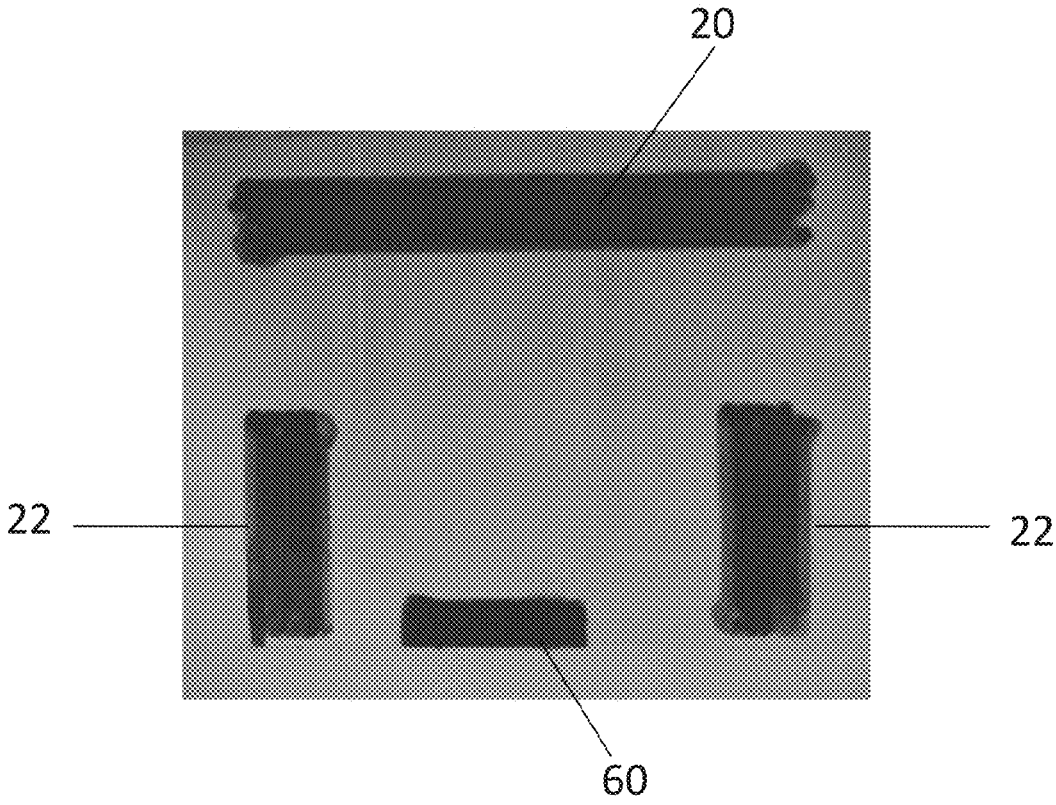Figure 3