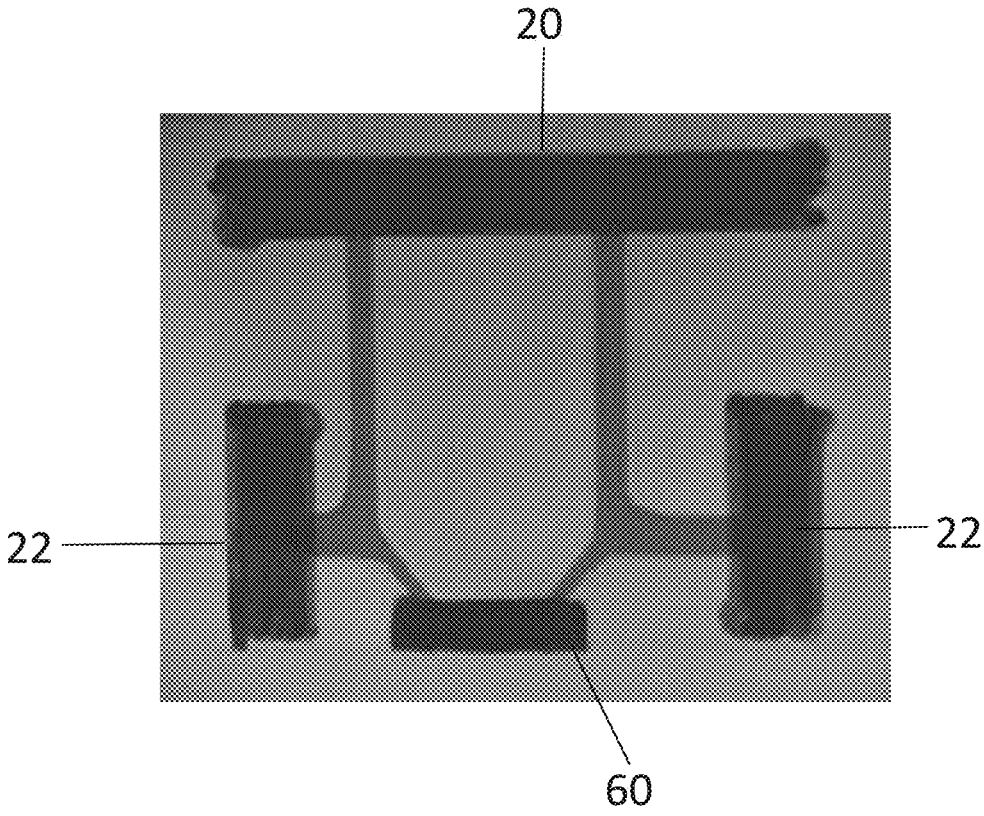Figure 5