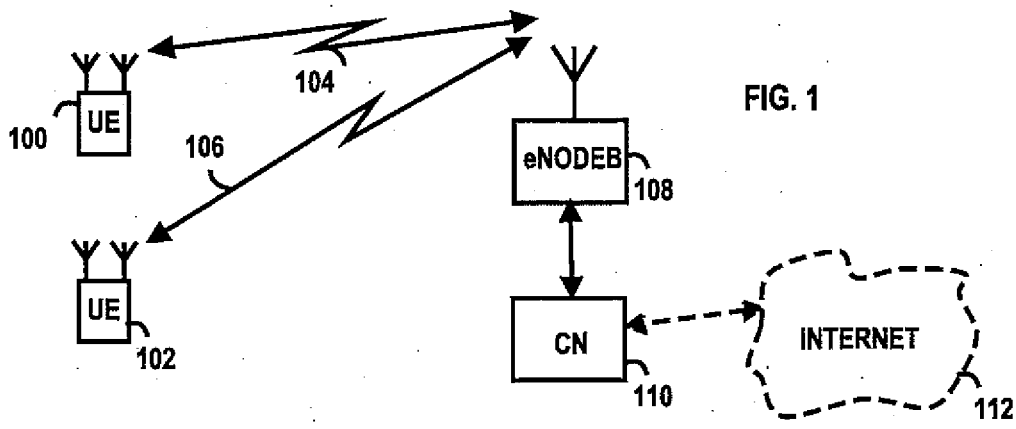
UE
100
104
106
UE
102
eNODEB
108
CN
110
INTERNET
112

FIG. 1

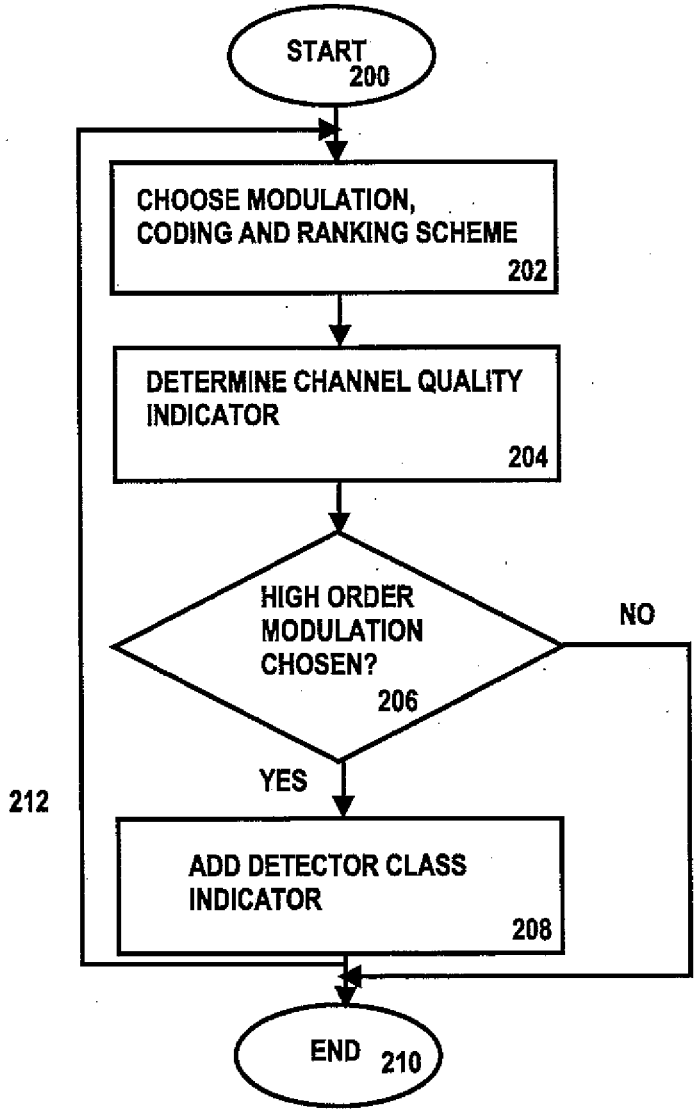
START
200
CHOOSE MODULATION, CODING AND RANKING SCHEME
202
DETERMINE CHANNEL QUALITY INDICATOR
204
HIGH ORDER MODULATION CHOSEN?
206
NO
YES
212
ADD DETECTOR CLASS INDICATOR
208
END
210

FIG. 2