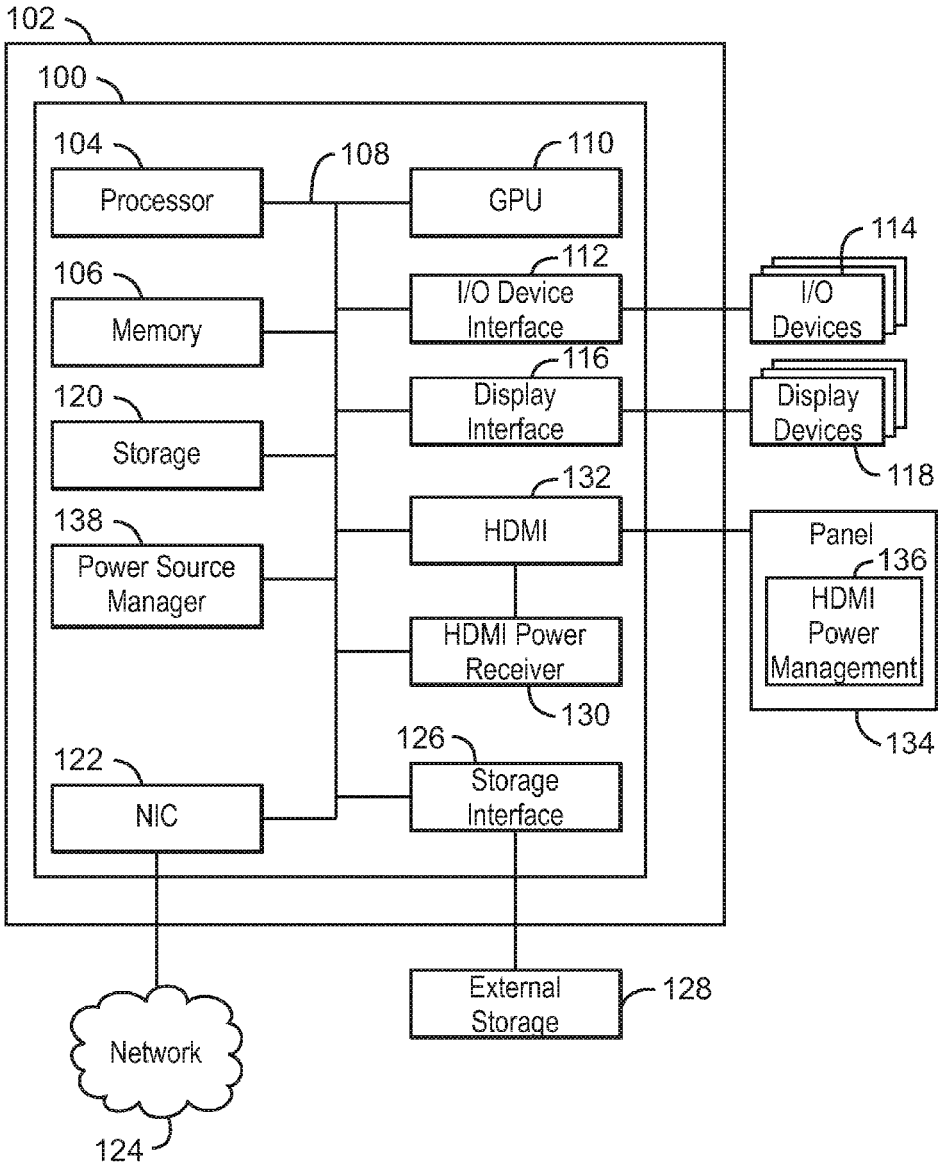
102
100
104
Processor
108
110
GPU
106
Memory
112
I/O Device Interface
114
I/O Devices
120
Storage
116
Display Interface
Display Devices
118
138
Power Source Manager
132
HDMI
Panel
136
HDMI Power Management
HDMI Power Receiver
130
134
122
NIC
126
Storage Interface
External Storage
128
Network
124

FIG. 1A