FIG.1A

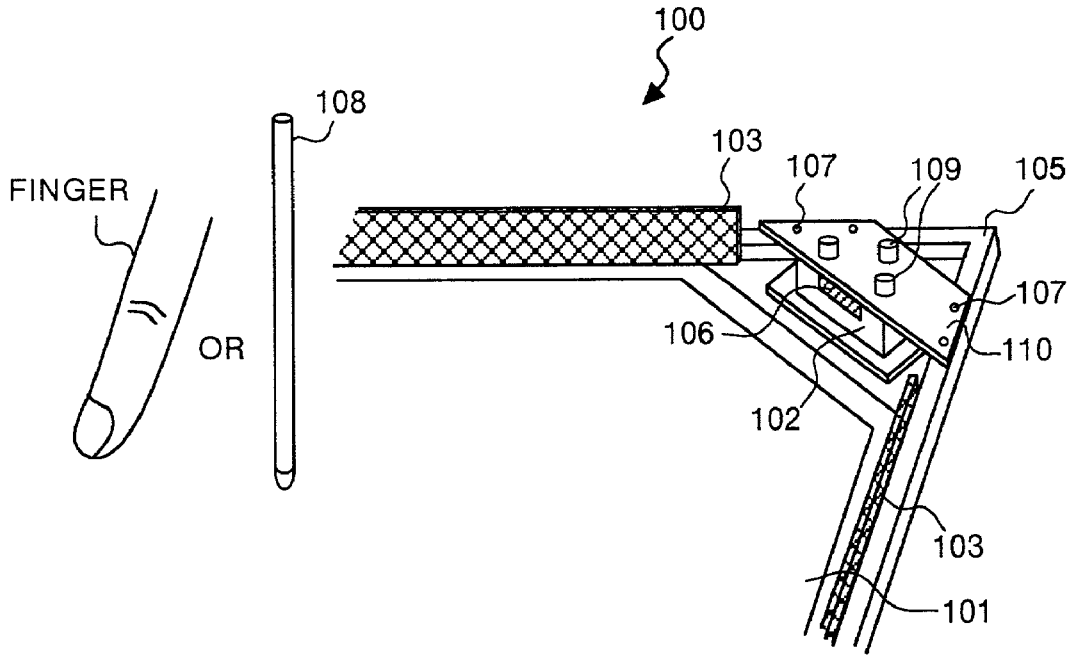
100
108
FINGER
OR
103
107
109
105
107
106
110
102
103
101

FIG.1B

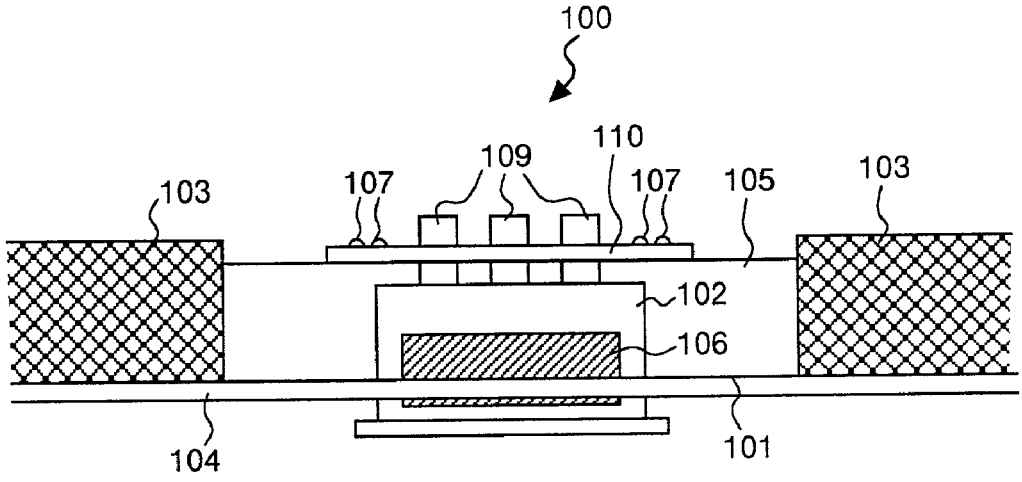
100
110
109
103
107
107
105
103
102
106
104
101