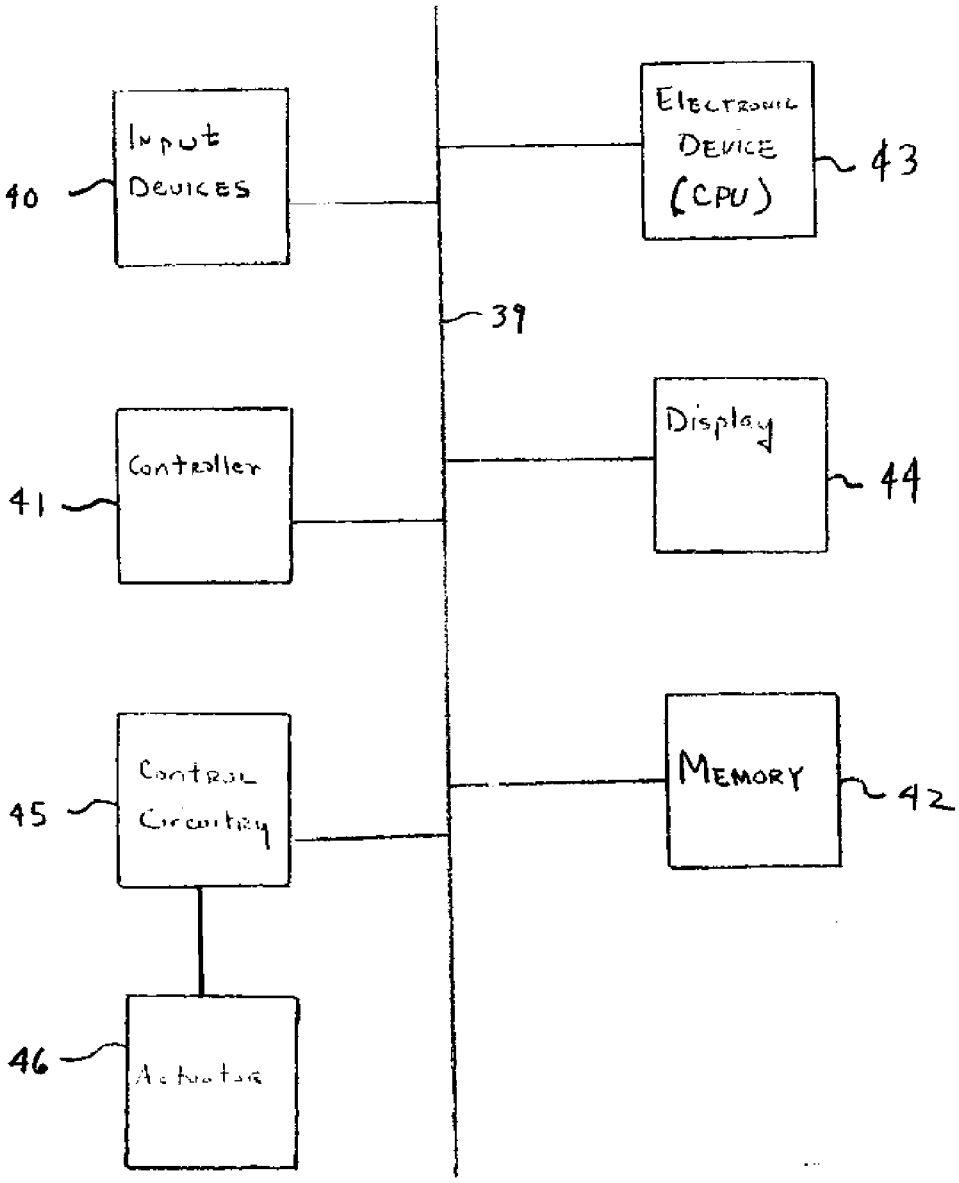
Input Devices
40
Electronic Device (CPU)
43
39
Controller
41
Display
44
Control Circuitry
45
Memory
42
Actuator
46

Fig. 7