FIG.3

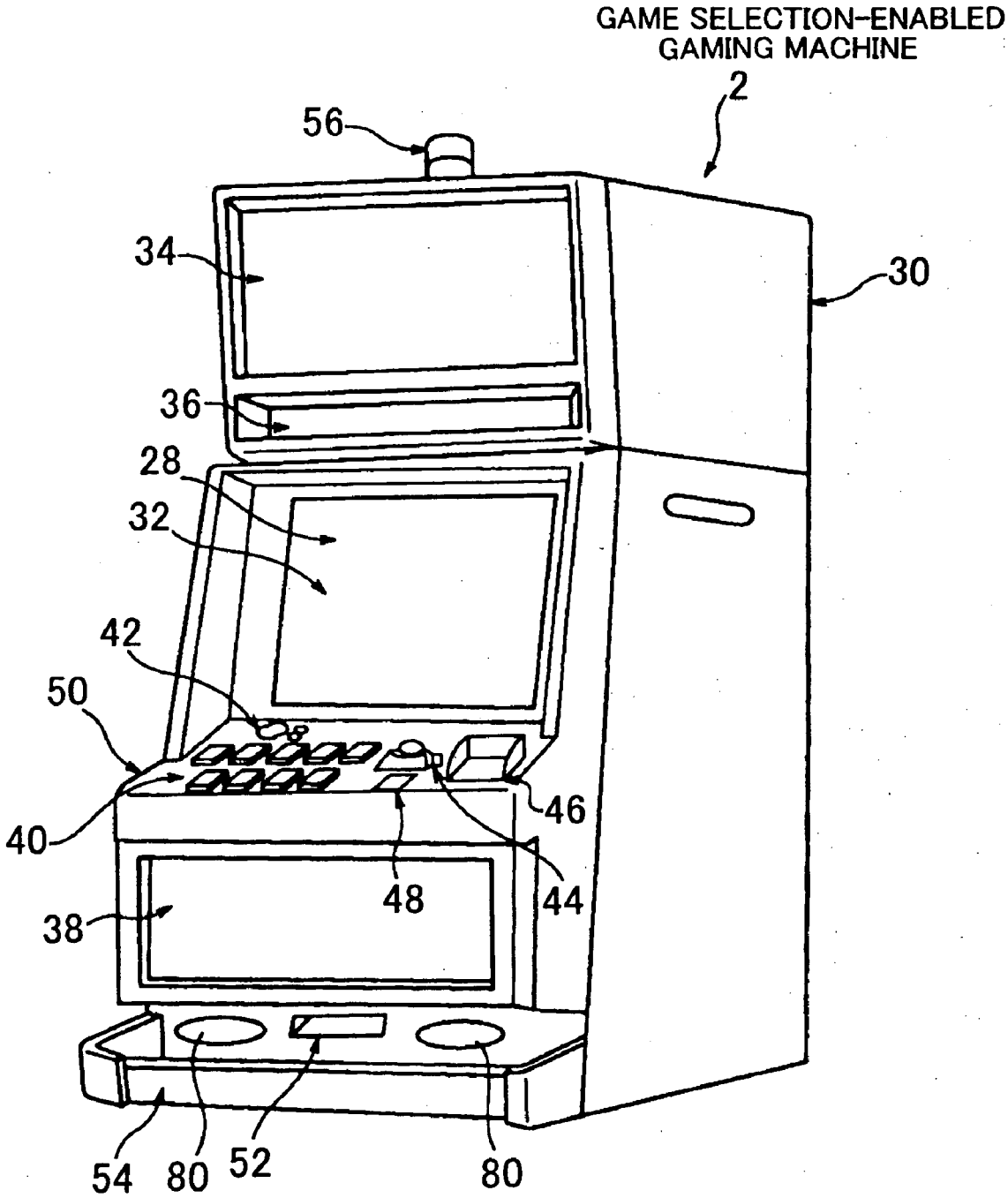
GAME SELECTION-ENABLED
GAMING MACHINE
2
56
34
30
36
28
32
42
50
40
46
48
44
38
54
80
52
80