FIG. 6

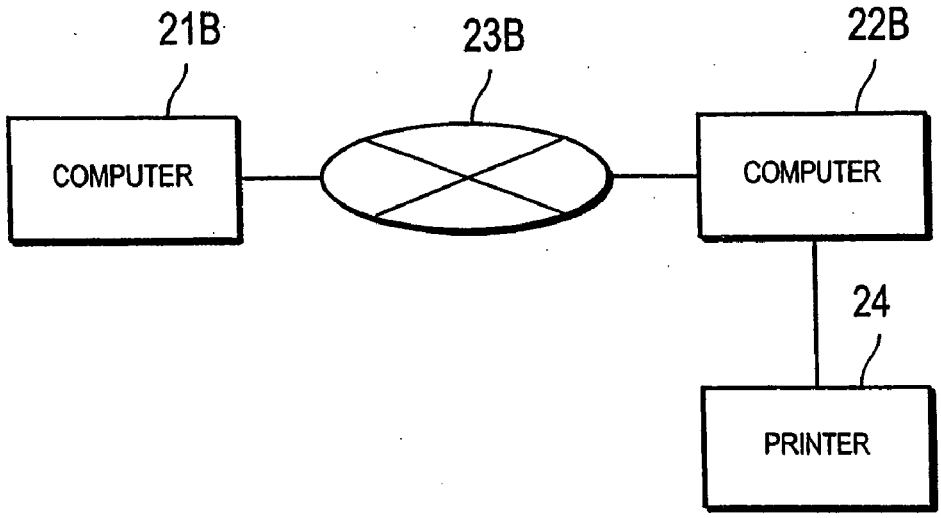
21B
23B
22B
COMPUTER
COMPUTER
24
PRINTER

FIG. 7

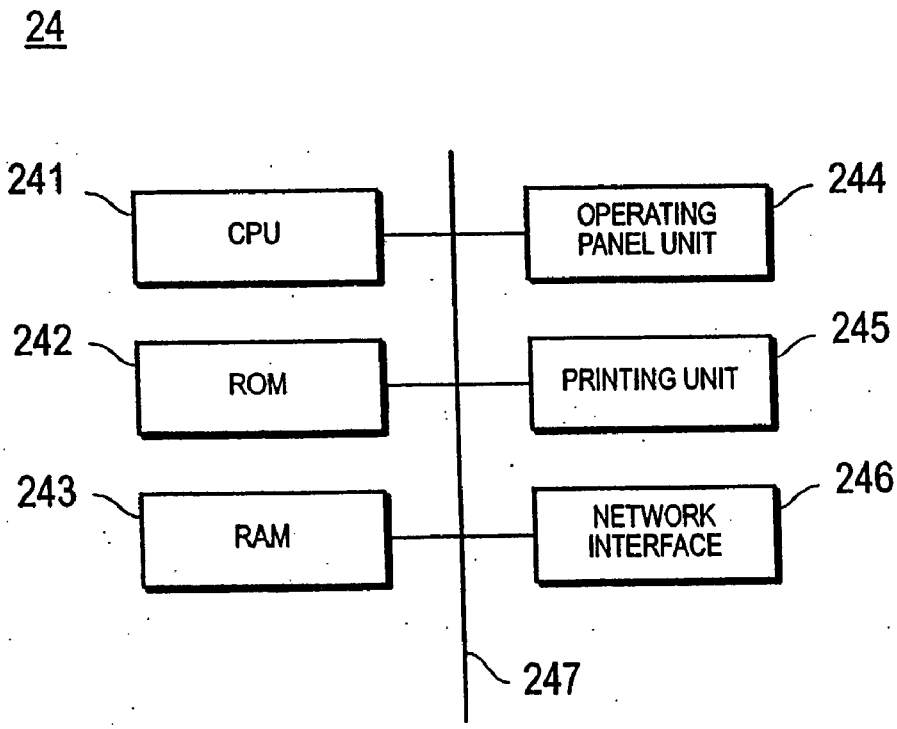
24
241
CPU
242
ROM
243
RAM
244
OPERATING PANEL UNIT
245
PRINTING UNIT
246
NETWORK INTERFACE
247