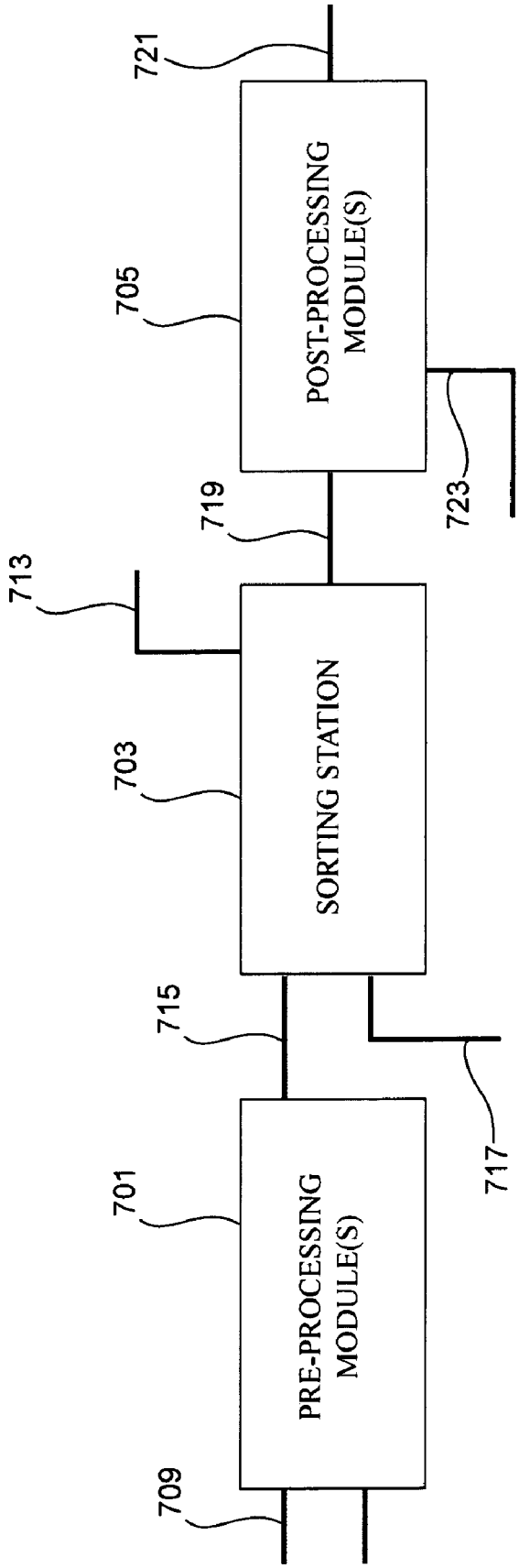
721
705
POST-PROCESSING MODULE(S)
723
719
713
703
SORTING STATION
715
717
701
PRE-PROCESSING MODULE(S)
709

FIG. 7A