FIG. 7B

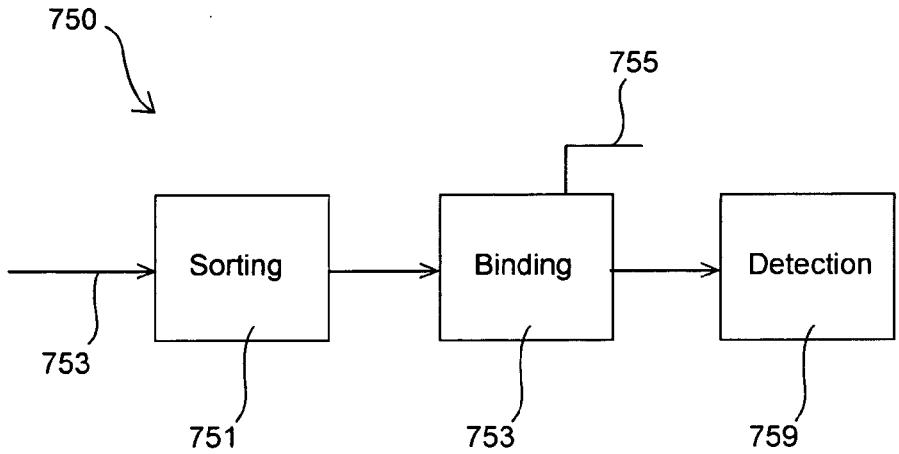
750
755
Sorting
Binding
Detection
753
751
753
759

FIG. 7C

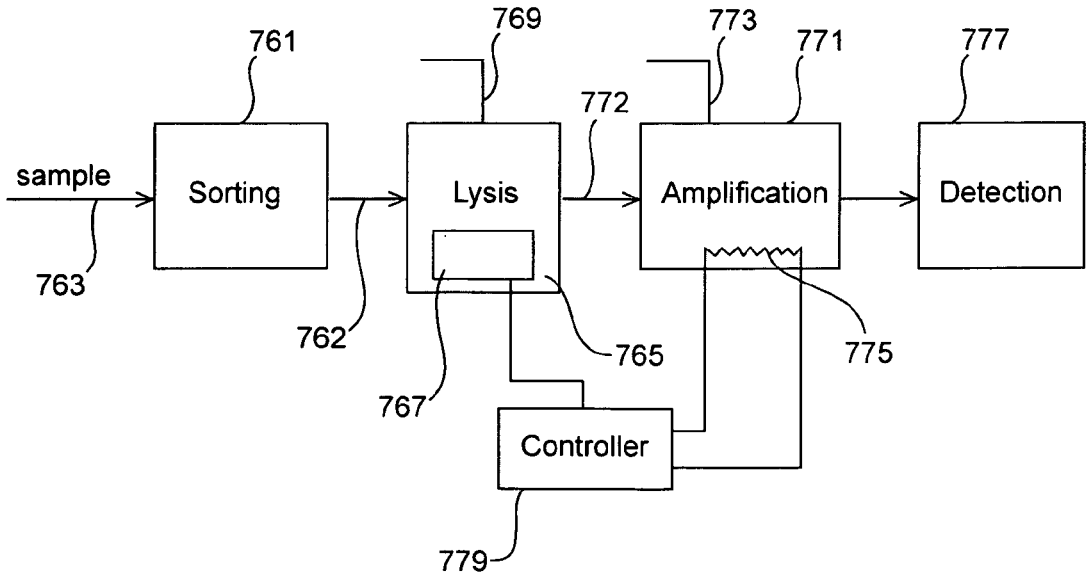
761
769
773
771
777
772
sample
Sorting
Lysis
Amplification
Detection
763
762
765
775
767
Controller
779