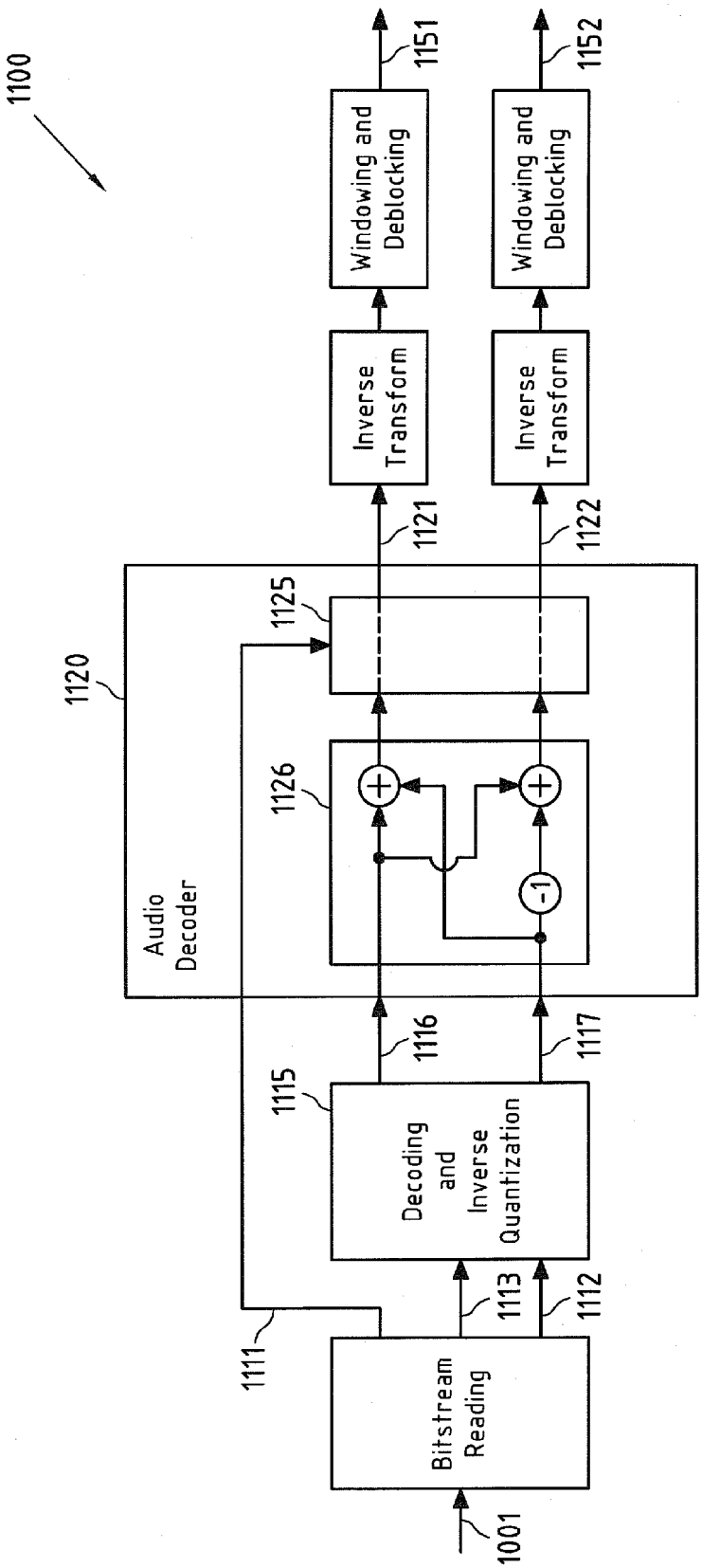
1100
1001
Bitstream Reading
1111
1113
1112
1115
Decoding and Inverse Quantization
1116
1117
1120
Audio Decoder
1126
-1
1125
1121
1122
Inverse Transform
Inverse Transform
Windowing and Deblocking
Windowing and Deblocking
1151
1152

Fig.11