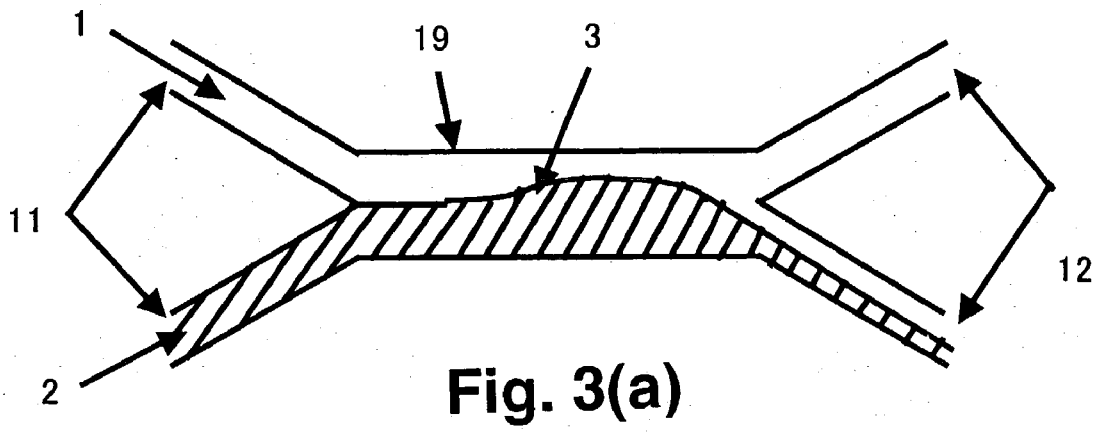

Fig. 3(a)

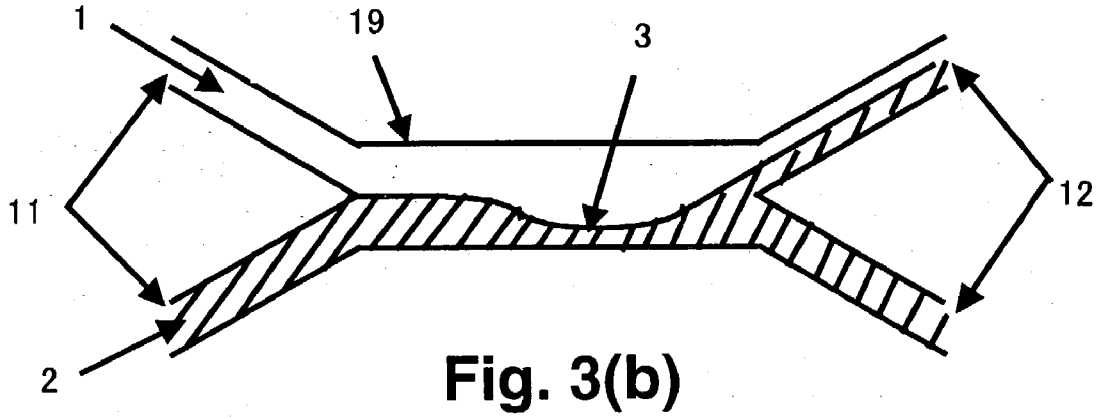

Fig. 3(b)

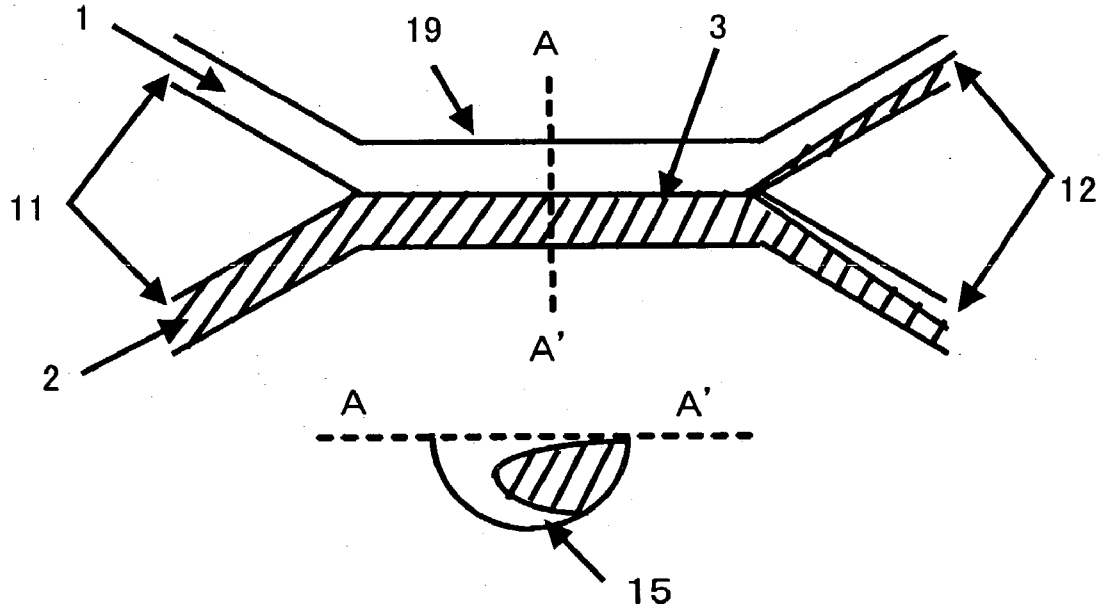

Fig. 3(c)