FIG.11

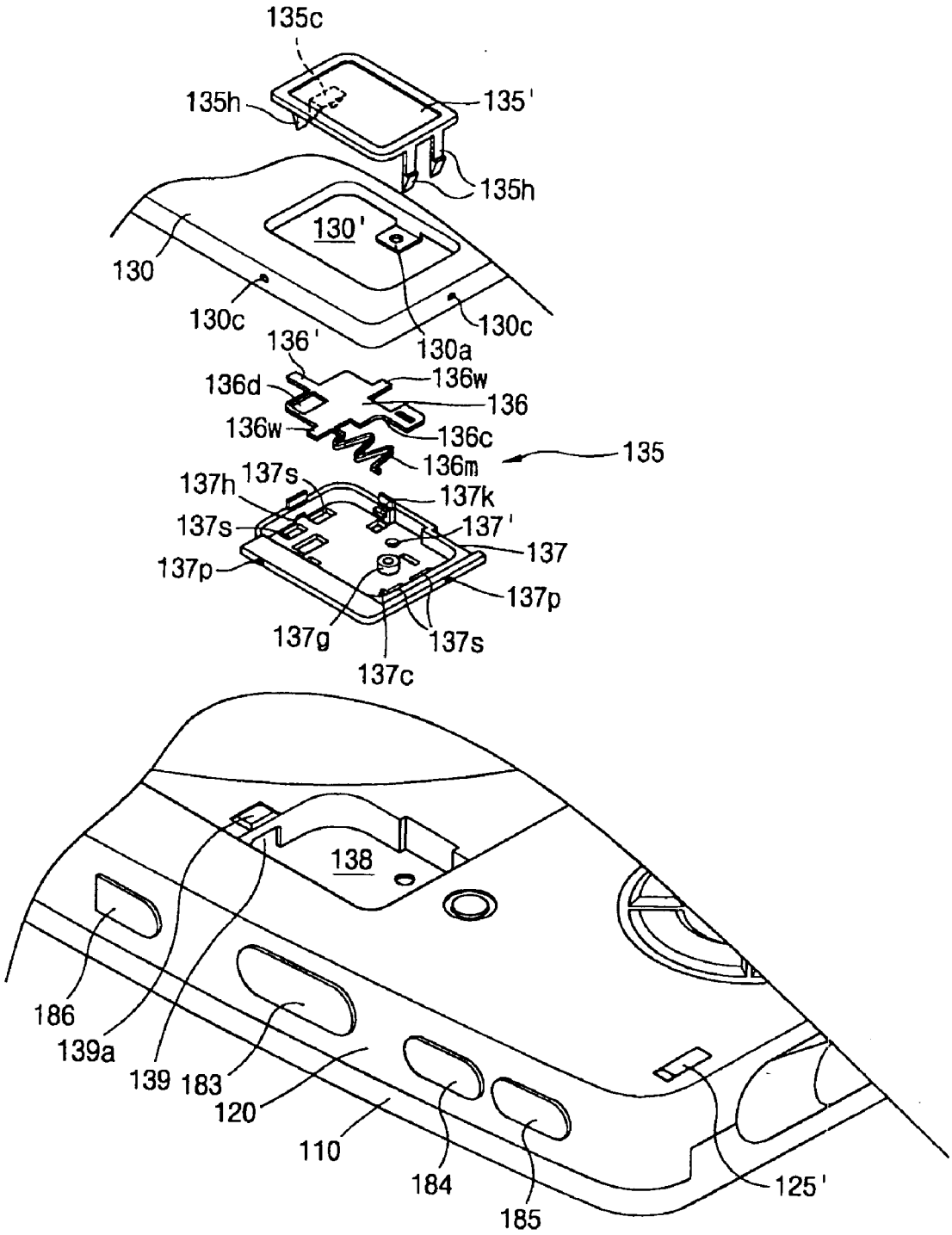
135c
135h
135'
135h
130'
130
130c
130c
130a
136'
136d
136w
136
136w
136c
136m
135
137h
137s
137k
137s
137'
137
137p
137p
137g
137s
137c
138
186
139a
139
183
120
110
184
185
125'